THIS DRAWING IS UNPUBLISHED. RELEASED FOR PUBLICATION -,- .
© COPYRIGHT - By - ALL RIGHTS RESERVED.

LOC	DIST
AA	22

REVISIONS

P	LTR	DESCRIPTION	DATE	DWN	APVD
	1	PRELIMINARY	18MAY2012	JJ	AC

1. MATERIAL: POLYESTER LCP
BLACK, UL94V-0; LEAD FREE IR REFLOW SOLDERING PROCESS COMPATIBLE.
TERMINALS - .36[.014] THICK PHOS BRONZE PLATED WITH 3.81 μm[.000150] MINIMUM THICK (SEE P/N TABLE) IN SOLDER AREA. 1.27μm [.000050] MINIMUM GOLD IN LOCALIZED PLATE AREA. ENTIRE TERMINAL PLATED WITH 1.27μm [.000050] MINIMUM THICK NICKEL.

2. JACK CAVITY CONFORMS TO FCC RULES AND REGULATIIONS PART 68, SUBPART F.

3. SUGGESTED PANEL OPENING DIMENSIONS.

4. SUGGESTED CLEARANCE BETWEEN BOTTOM OF CONNECTOR AND BOTTOM PANEL OPENING.

5. 80 PIECES/TRAY, 10 TRAYS/BOX.

6. MANUFACTURING DATE CODE:
INK STAMP, LOCATED APPROX. AS SHOWN.
FIRST 2 DIGITS = LAST 2 DIGITS OF YEAR.
NEXT 2 DIGITS = MANUFACTURING WORK WEEK.
LAST DIGIT = DAY OF WEEK WITH SUNDAY = 1.

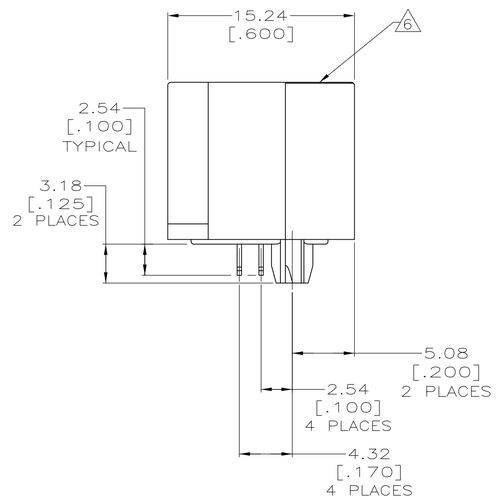

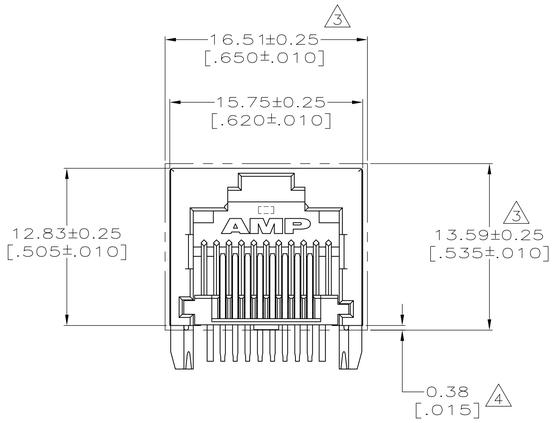

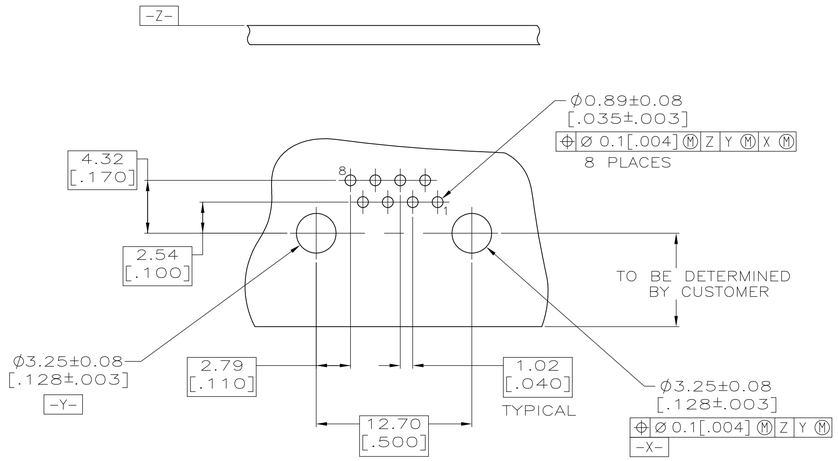

SUGGESTED PRINTED CIRCUIT BOARD LAYOUT
(COMPONENT SIDE)

THIS PRINT IS
PRELIMINARY
UNQUALIFIED PRODUCT
CONTACT PRODUCT ENGINEERING
BEFORE USING THIS PRINT

MATTE TIN	TRAY	2170354-1
1 TERMINAL PLATING	PACKAGING	PART NUMBER

THIS DRAWING IS A CONTROLLED DOCUMENT.

DIMENSIONS: mm [INCHES]

TOLERANCES UNLESS OTHERWISE SPECIFIED:
0 PLC ± -
1 PLC ± -
2 PLC ± 0.25[.010]
3 PLC ± 0.13[.005]
4 PLC ± -
ANGLES ± -

MATERIAL - 1
FINISH - 1

DWN Jeremy Ji 17MAY2012
CHK Denny Zhu 17MAY2012
APVD Alex Cai 17MAY2012
PRODUCT SPEC 108-1163-4
APPLICATION SPEC 114-2154
WEIGHT -

TE Connectivity

NAME INVERTED MODULAR JACK ASSEMBLY, 1X1

SIZE	CAGE CODE	DRAWING NO	RESTRICTED TO
A1	00779	C-2170354	—

CUSTOMER DRAWING | SCALE 4:1 | SHEET 1 OF 1 | REV 1

4805 (3/11)