THIS DRAWING IS UNPUBLISHED. RELEASED FOR PUBLICATION 20
© COPYRIGHT 20 BY - ALL RIGHTS RESERVED.

| REVISIONS | | | | | |
|---|---|---|---|---|---|
| F | LTR | DESCRIPTION | DATE | DWN | APVD |
| | A | INITIAL RELEASE | 12SEP2016 | DW | CW |

# TYPE 1

Single PG/M thread

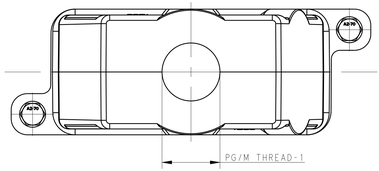


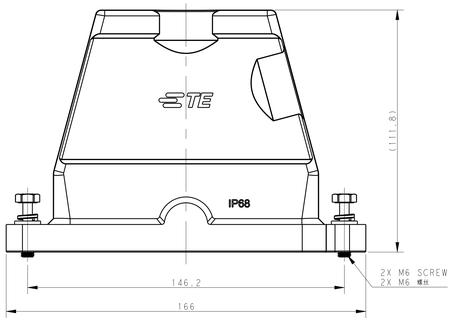


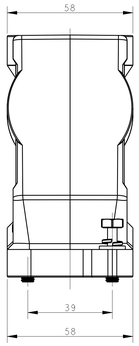


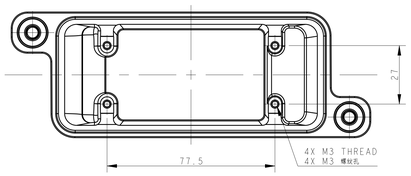


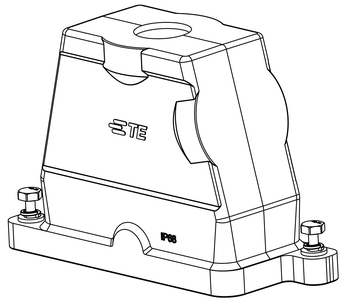


# TYPE 2

Two PG/M threads

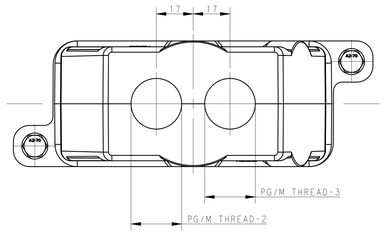


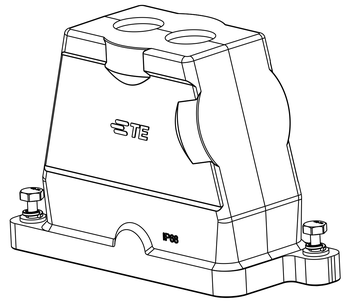


All dimension is same as TYPE 1,except those defined in this TYPE

# TYPE 3

Three PG/M threads

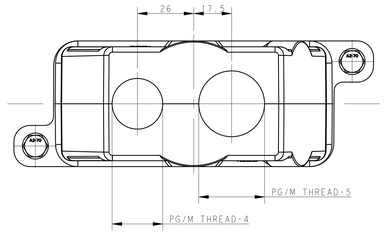


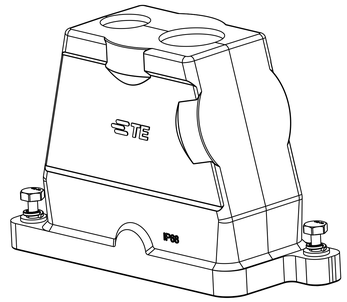


All dimension is same as TYPE 1,except those defined in this TYPE

NOTES:
1.TECHNICAL CHARACTERISTICS:
HOOD MATERIAL: DIE CAST ALUMINIUM ALLOY
SURFACE: SEE TABLE
DEGREE OF PROTECTION: IP68 (MATED)

注释
1. 技术参数：
壳体材料： 铝合金
表面处理： 见表格
防护等级： IP68 （配合）

| PART NUMBER 料号 | PART DESCRIPTION 描述 | | PG/M THREAD-5 PG/M 螺纹-5 | PG/M THREAD-4 PG/M 螺纹-4 | PG/M THREAD-3 PG/M 螺纹-3 | PG/M THREAD-2 PG/M 螺纹-2 | PG/M THREAD-1 PG/M 螺纹-1 | TYPE 类型 |
|---|---|---|---|---|---|---|---|---|
| TI920163225-109 | H16BPR-TGH-M32/M25-EMC-C | H16BPR HOOD, DIAGONAL LOCKING, TOP ENTRY M32/M25, POWDER COATED,BLACK<br>H16BPR对角锁定顶出上壳M32/M25 黑色 | M32 | M25 | - | - | - | TYPE 3 类型3 |
| TI920163225-009 | H16BPR-TGH-M32/M25-EMC-C | H16BPR HOOD, DIAGONAL LOCKING, TOP ENTRY M32/M25, POWDER COATED,GREY<br>H16BPR对角锁定顶出上壳M32/M25 灰色 | M32 | M25 | - | - | - | |
| TI920162516-009 | H16BPR-TGH-M25/M16-EMC-C | H16BPR HOOD, DIAGONAL LOCKING, TOP ENTRY M25/M16, POWDER COATED,BLACK<br>H16BPR对角锁定顶出上壳M25/M16 黑色 | - | - | M16 | M25 | - | |
| TI920161225-009 | H16BPR-TGH-2M25-EMC-C | H16BPR HOOD, DIAGONAL LOCKING, TOP ENTRY 2M25, POWDER COATED,SILVER WHITE<br>H16BPR对角锁定顶出上壳2M25 银白色 | - | - | M25 | M25 | - | TYPE 2 类型2 |
| TI920160225-009 | H16BPR-TGH-2M25-EMC-C | H16BPR HOOD, DIAGONAL LOCKING, TOP ENTRY 2M25, POWDER COATED,BLACK<br>H16BPR对角锁定顶出上壳2M25 黑色 | - | - | M25 | M25 | - | |
| TI920161140-009 | H16BPR-TGH-M40-EMC-C | H16BPR HOOD, DIAGONAL LOCKING, TOP ENTRY M40, POWDER COATED,SILVER WHITE<br>H16BPR对角锁定顶出上壳M40 银白色 | - | - | - | - | M40 | TYPE 1 类型1 |
| TI920161136-009 | H16BPR-TGH-PG36-EMC-C | H16BPR HOOD, DIAGONAL LOCKING, TOP ENTRY PG36, POWDER COATED,SILVER WHITE<br>H16BPR对角锁定顶出上壳PG36 银白色 | - | - | - | - | PG36 | |
| TI920161132-009 | H16BPR-TGH-M32-EMC-C | H16BPR HOOD, DIAGONAL LOCKING, TOP ENTRY M32, POWDER COATED,SILVER WHITE<br>H16BPR对角锁定顶出上壳M32 银白色 | - | - | - | - | M32 | |
| TI920161129-009 | H16BPR-TGH-PG29-EMC-C | H16BPR HOOD, DIAGONAL LOCKING, TOP ENTRY PG29, POWDER COATED,SILVER WHITE<br>H16BPR对角锁定顶出上壳PG29 银白色 | - | - | - | - | PG29 | |
| TI920161125-009 | H16BPR-TGH-M25-EMC-C | H16BPR HOOD, DIAGONAL LOCKING, TOP ENTRY M25, POWDER COATED,SILVER WHITE<br>H16BPR对角锁定顶出上壳M25 银白色 | - | - | - | - | M25 | |
| TI920161121-009 | H16BPR-TGH-PG21-EMC-C | H16BPR HOOD, DIAGONAL LOCKING, TOP ENTRY PG21, POWDER COATED,SILVER WHITE<br>H16BPR对角锁定顶出上壳PG21 银白色 | - | - | - | - | PG21 | |
| TI920160140-009 | H16BPR-TGH-M40-EMC-C | H16BPR HOOD, DIAGONAL LOCKING, TOP ENTRY M40, POWDER COATED,BLACK<br>H16BPR对角锁定顶出上壳M40 黑色 | - | - | - | - | M40 | |
| TI920160136-009 | H16BPR-TGH-PG36-EMC-C | H16BPR HOOD, DIAGONAL LOCKING, TOP ENTRY PG36, POWDER COATED,BLACK<br>H16BPR对角锁定顶出上壳PG36 黑色 | - | - | - | - | PG36 | |
| TI920160132-009 | H16BPR-TGH-M32-EMC-C | H16BPR HOOD, DIAGONAL LOCKING, TOP ENTRY M32, POWDER COATED,BLACK<br>H16BPR对角锁定顶出上壳M32 黑色 | - | - | - | - | M32 | |
| TI920160129-009 | H16BPR-TGH-PG29-EMC-C | H16BPR HOOD, DIAGONAL LOCKING, TOP ENTRY PG29, POWDER COATED,BLACK<br>H16BPR对角锁定顶出上壳PG29 黑色 | - | - | - | - | PG29 | |
| TI920160125-009 | H16BPR-TGH-M25-EMC-C | H16BPR HOOD, DIAGONAL LOCKING, TOP ENTRY M25, POWDER COATED,BLACK<br>H16BPR对角锁定顶出上壳M25 黑色 | - | - | - | - | M25 | |
| TI920160121-009 | H16BPR-TGH-PG21-EMC-C | H16BPR HOOD, DIAGONAL LOCKING, TOP ENTRY PG21, POWDER COATED,BLACK<br>H16BPR对角锁定顶出上壳PG21 黑色 | - | - | - | - | PG21 | |

THIS DRAWING IS A CONTROLLED DOCUMENT.

DIMENSIONS: mm

TOLERANCES UNLESS OTHERWISE SPECIFIED:
0 PLC ±-
1 PLC ±-
2 PLC ±-
3 PLC ±-
4 PLC ±-
ANGLES ±-

MATERIAL - -
FINISH - -

DWN DAVID WANG 12SEP2016
CHK CHRIS WANG 12SEP2016
APVD KIANG XU 12SEP2016

PRODUCT SPEC 108-137191
APPLICATION SPEC 114-137191
WEIGHT - -

CUSTOMER DRAWING

TE Connectivity

NAME H16BPR-TGH-PG/M-EMC-C

SIZE A0 | CAGE CODE - | DRAWING NO C-T192016XXXXX09 | RESTRICTED TO -

SCALE 1:1 | SHEET 1 OF 1 | REV A

A806 (3/13)