DRAWING MADE IN THIRD ANGLE PROJECTION

THIS DRAWING IS UNPUBLISHED. RELEASED FOR PUBLICATION , 19 .

© COPYRIGHT 19 BY AMP INCORPORATED, HARRISBURG, PA. ALL INTERNATIONAL RIGHTS RESERVED. AMP PRODUCTS MAY BE COVERED BY U.S. AND FOREIGN PATENTS AND/OR PATENTS PENDING.

LOC AA DIST 22

REVISIONS

| P | F | ZONE | LTR | DESCRIPTION | DATE | APPROVED |
|---|---|---|---|---|---|---|
| | | | D | REVISED; ECN AA-8120 | 3-24-92 | LHS |

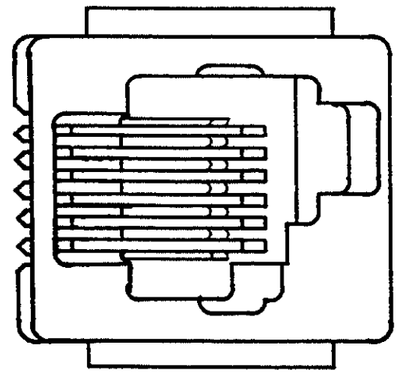

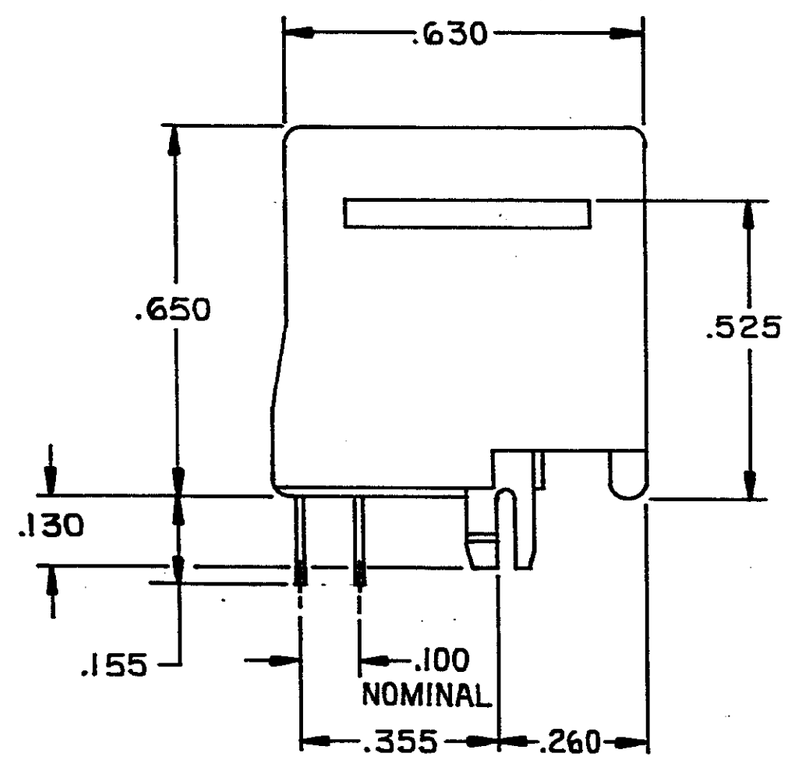


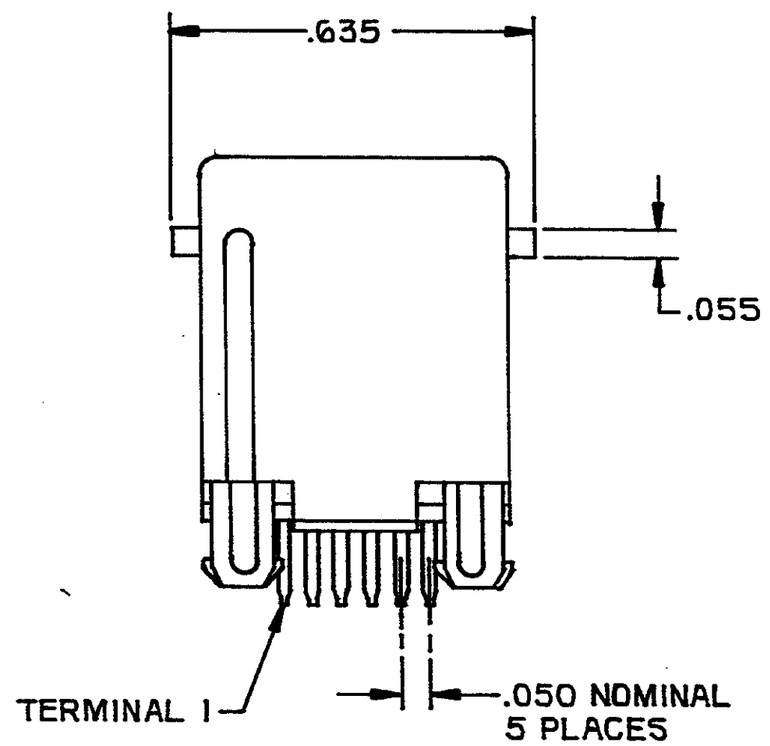


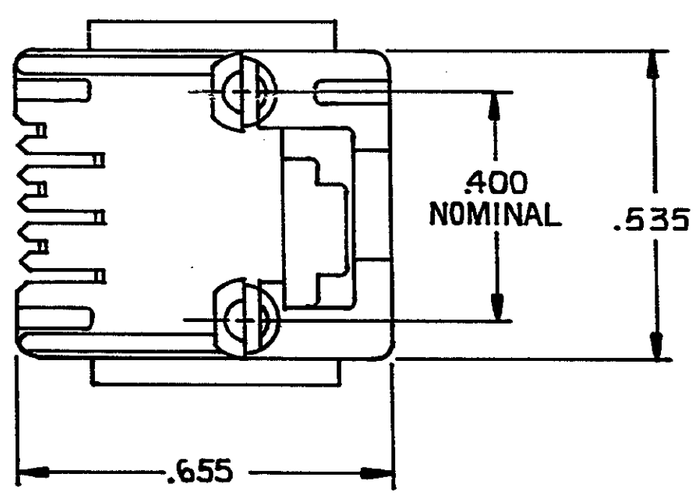


1. MATERIAL: HOUSING – PBT POLYESTER, GRAY
   TERMINAL – .0138 THICK PHOSPORUS BRONZE PLATED WITH .00005 THICK HARD GOLD IN LOCALIZED GOLD PLATE AREA AND .00008 THICK TIN-LEAD IN SOLDER AREA OVER .00005 THICK NICKEL UNDERPLATE.
2. FOR APPLICATION INFORMATION SEE AMP SPECIFICATION 114-2048.
3. FOR PERFORMANCE REQUIREMENTS SEE AMP SPECIFICATION 108-1163.
4. ALL DIMENSIONS SHOWN ARE MAXIMUM UNLESS OTHERWISE SPECIFIED.

554990-1

PART NO

UNLESS OTHERWISE SPECIFIED DIMENSIONS ARE IN INCHES.
TOLERANCES ON:
DECIMALS ±
ANGLES ±

MATERIAL

FINISH

CONTRACT NO

DR J. Canty 5/7/86

CHK E. Fox 5/12/86

APPD Jim A. Wolfe 5/12/86

APPD J.C. Williamson 5/13/86

DSGN APPD

OTHER APPD

AMP | AMP INCORPORATED Harrisburg, Pa. 17105

NAME PRINTED CIRCUIT MODULAR JACK ASSEMBLY, TOP ENTRY, 6 POSITION, FLANGELESS, W/PANEL STOPS, RIGHT LATCH

| SIZE | FSCM NO | DRAWING NO |
|---|---|---|
| C | 00779 | 554990 |

SCALE 4:1 SHEET 1 OF 1

WAS 86-1056-7-1

554990

AMP 1471-7

CUSTOMER DRAWING