THIS DRAWING IS UNPUBLISHED. RELEASED FOR PUBLICATION 20
© COPYRIGHT 20 BY - ALL RIGHTS RESERVED.

LOC	DIST
FT	0

REVISIONS

P	LTR	DESCRIPTION	DATE	DWN	APVD
	A2	REVISED PER ECO-11-005027	16MAR2011	RK	HMR

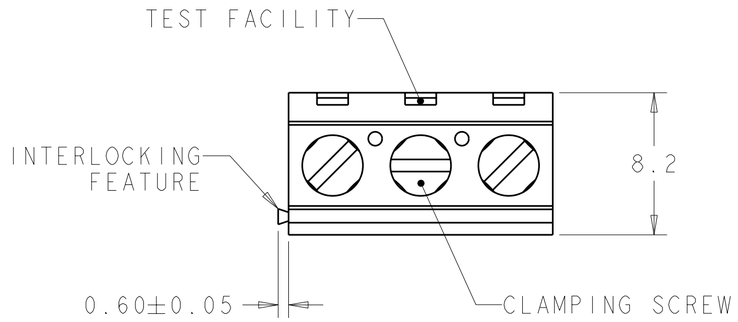

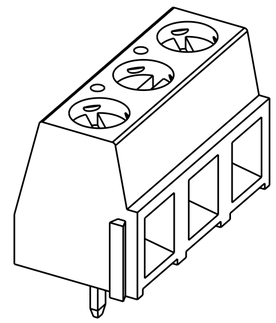

1546217-3 AS SHOWN

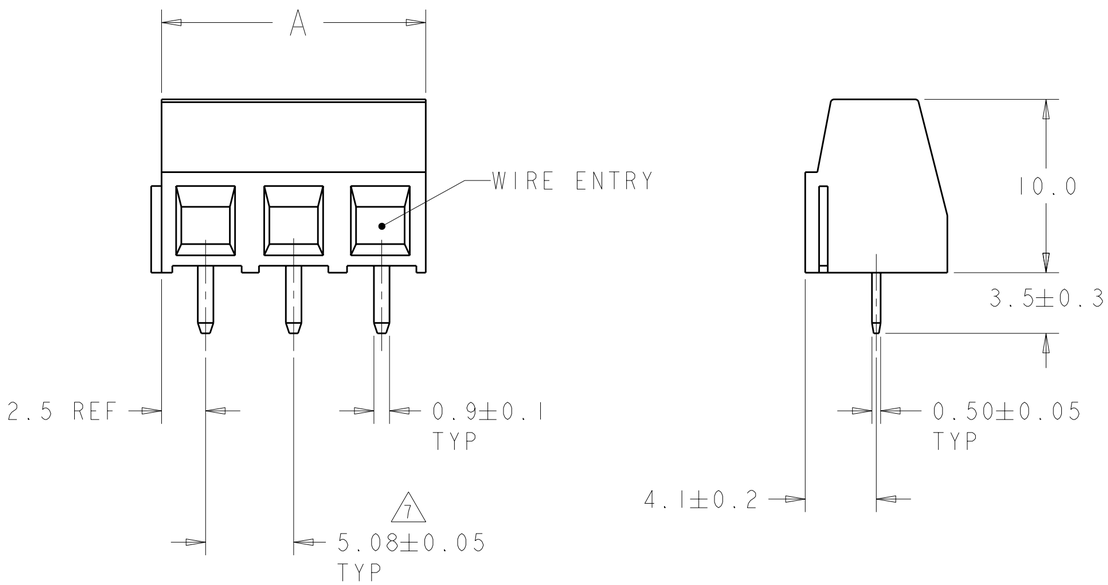

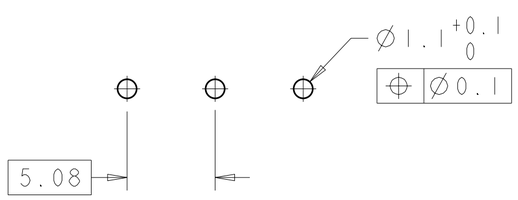

RECOMMENDED PC BOARD LAYOUT

1. MATERIALS AND FINISH
   HOUSING: PA 6-6, UL 94-V0, COLOR GRAY.
   CLAMP: BRASS, NICKEL PLATED.
   TERMINAL: BRASS, TIN PLATED.
   CLAMPING SCREW: M3, BRASS, NICKEL PLATED.
2. SUITABLE FOR 1,6-2,4mm PC BOARD THICKNESS.
3. END-TO-END STACKABLE W/INTERLOCK WITHOUT LOSS OF CENTERLINE SPACING.
4. WIRE SIZE RANGE: 16-30 AWG.
5. RECOGNIZED UNDER THE COMPONENT PROGRAM OF UNDERWRITERS LABORATORIES INC., FILE N° E60677.
6. IMQ CERTIFICATE WITH SURVEILLANCE IN CONFORMITY WITH IEC 998-1/998-2-1.
7. NOT CUMULATIVE TOLERANCE.

A	NO OF POSN	PART NUMBER
127.00	25	2-1546217-5
121.92	24	2-1546217-4
116.84	23	2-1546217-3
111.76	22	2-1546217-2
106.68	21	2-1546217-1
101.60	20	2-1546217-0
96.52	19	1-1546217-9
91.44	18	1-1546217-8
86.36	17	1-1546217-7
81.28	16	1-1546217-6
76.20	15	1-1546217-5
71.12	14	1-1546217-4
66.04	13	1-1546217-3
60.96	12	1-1546217-2
55.88	11	1-1546217-1
50.80	10	1-1546217-0
45.72	9	1546217-9
40.64	8	1546217-8
35.56	7	1546217-7
30.48	6	1546217-6
25.40	5	1546217-5
20.32	4	1546217-4
15.24	3	1546217-3
10.16	2	1546217-2

THIS DRAWING IS A CONTROLLED DOCUMENT.

DIMENSIONS: mm

TOLERANCES UNLESS OTHERWISE SPECIFIED:
0 PLC ±-
1 PLC ±.3
2 PLC ±.25
3 PLC ±-
4 PLC ±-
ANGLES ±2

MATERIAL 1
FINISH 1

DWN S.WELDON 14APR2003
CHK C.RICHARD 14APR2003
APVD C.RICHARD 14APR2003
PRODUCT SPEC 108-20166
APPLICATION SPEC 114-20079
WEIGHT -

TE Connectivity

NAME TERMINAL BLOCK, PCB MOUNT SIDE ENTRY WIRE, STACKING W/INTERLOCK, 5.08mm PITCH

SIZE	CAGE CODE	DRAWING NO	RESTRICTED TO
A2	00779	C-1546217	-

CUSTOMER DRAWING | SCALE 4:1 | SHEET 1 OF 1 | REV A2