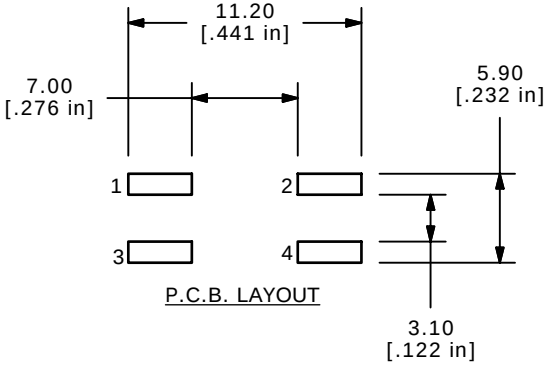

P.C.B. LAYOUT

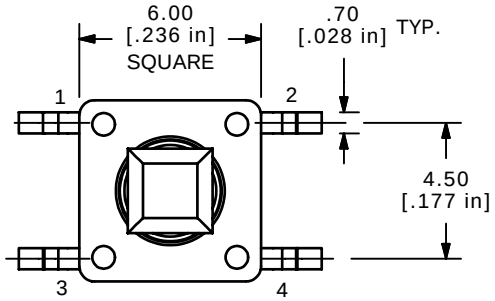

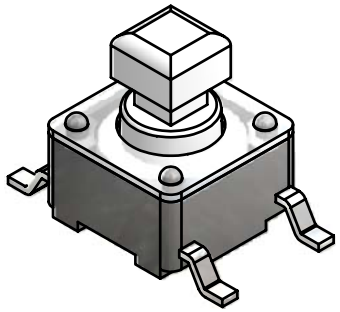

ISOMETRIC

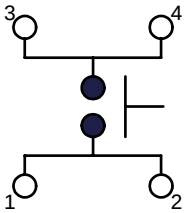

CIRCUIT: SPST

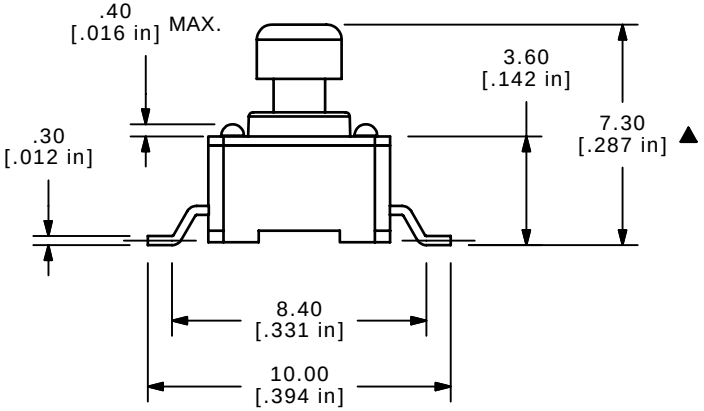

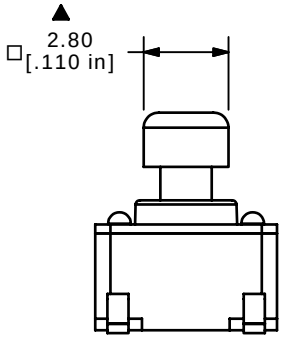

NOTES:
1. ALL DIMENSIONS IN MM
2. GENERAL TOLERANCE: X.X=±0.4
   X.XX=±0.25
3. TERM. NOS. FOR REFERENCE ONLY.
4. RATING: 12VDC, 50mA
5. ▲ OPERATING FORCE: 100 ±50 gf
6. TRAVEL: 0.25mm +0.2/-0.1mm
7. CONTACT RESISTANCE: 100 MILLI OHMS MAX. (INITIAL)
8. MECHANICAL/ELECTRICAL LIFE 100,000 CYCLES.
9. CONTACT MATERIAL: SILVER
10. ▲ 2002/95/EC (ROHS) COMPLIANT
11. PACKAGING: 90/PCS TUBE
12. ▲ DENOTES CRITICAL PARAMETER

REV	PCR NO	DESCRIPTION	DATE	BY
D	16673	UPDATED, CONVERTED INVENTOR	11/17/06	TN

THE INFORMATION CONTAINED IN THIS DOCUMENT IS PROPRIETARY TO E-SWITCH AND IS NOT TO BE COPIED OR TRANSFERRED

E-SWITCH®

TITLE TL3301SPF100QG

SCALE	DATE	DR	DWG	REV
4:1	11/17/2006	TN	P010788	D