THIS COPY IS PROVIDED ON A RESTRICTED BASIS AND IS NOT TO BE USED IN ANY WAY DETRIMENTAL TO THE INTERESTS OF PANDUIT CORP.

PANDUIT PART NUMBER	STUD SIZE	DIMENSIONS - in.					TOOLS
		A ± .03	W ± .01	C ± .02	M ± .03	H ±.01	
PNF18-6LFW	#6	.85 (21.6)	.29 (7.4)	.20 (5.1)	.63 (16.0)	.15 (3.8)	CT-100A *CT-160 *CT-260 **CT-400 CT-600-A (CT-500CH) CT-600-A (CT-550CH) CT-1550 CT-1551 CT-2500 (CT-2550CH)
PNF18-6LF	#6	.82 (20.8)	.27 (6.9)	.20 (5.1)	.63 (16.0)	.15 (3.8)	
PNF18-8LF	#8	.89 (22.6)	.29 (7.4)	.26 (6.6)	.68 (17.3)	.16 (4.1)	
PNF18-10LF	#10	.89 (22.6)	.33 (8.4)	.25 (6.4)	.68 (17.3)	.19 (4.8)	

** UL LISTED ONLY
*PANDUIT APPROVED TOOL

NOTES:

1. UL LISTED AND CSA CERTIFIED FOR:
   A. 600V MAX. BLDG WIRE
      1000V MAX. IN SIGNS, FIXTURES & LUMINARIES
   B. 221° F (105° C) MAX TEMP. RATING
   C. #22-18 AWG SOLID OR STRANDED, COPPER WIRE
2. SEE WWW.PANDUIT.COM FOR PACKAGE QUANTITIES
3. MATERIAL:
   A. STAMPING - .032" [.81]THK COPPER, TIN PLATED
   B. HOUSING - NYLON, RED
   C. SLEEVE - BRASS, TIN PLATED
4. DIMENSIONS IN BRACKETS ARE IN MILLIMETERS
5. WIRE STRIP LENGTH: 7/32 + 1/32 (5.6 + .8)
   - 0 - 0

c UL us
LISTED
587H
E52164

CSA
CERTIFIED
LR31212

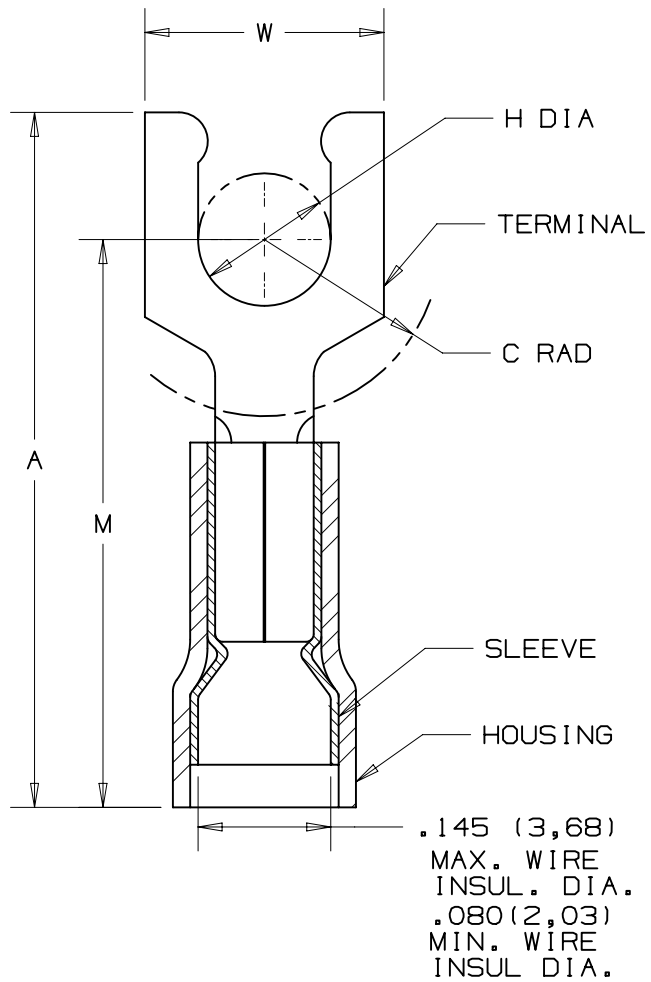

REV	DATE	BY	CHK	APR	DESCRIPTION	ECN
07	01/15	TMR	TMR	RGB	CORRECTED PART NUMBERS TO PNF, CT-400 CHANGED TO UL LISTED ONLY	N41056BA-DC
06	06/14	MBY	JHNU	RGB	REVISED NOTES, MOVED TOOLS TO TABLE, REVISED CERTIFICATION	N41056BA-A41056

TITLE
#22-18 LOCKING FORK NYLON INSUL FUNNEL WIRE ENTRY .145 [3.68] MAX WIRE INSUL DIA.

CUSTOMER DRAWING

ITEM REVISION NAME: N41056BA/07

DATASET FILE NAME: N41056BA/07

PANDUIT

UNLESS OTHERWISE SPECIFIED, DIMENSIONAL TOLERANCES ARE: IN [mm]

.X ± .XXX ±
.XX ± ANGLES ±

THIRD ANGLE PROJECTION

MATERIAL: SEE NOTES

DRAWING NUMBER: A41056

DRAWN BY	DATE	CHK	SCALE	SHT 1 OF 1	SIZE
DRL		LA	NONE		A

D10100DA/16