Apr.1.2017 Copyright 2017 HIROSE ELECTRIC CO., LTD. All Rights Reserved.

	COUNT	DESCRIPTION OF REVISIONS	BY	CHKD	DATE		COUNT	DESCRIPTION OF REVISIONS	BY	CHKD	DATE
△					. .	△					. .
△					. .	△					. .
△					. .	△					. .

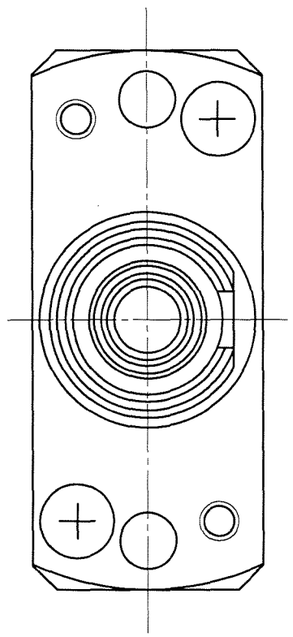

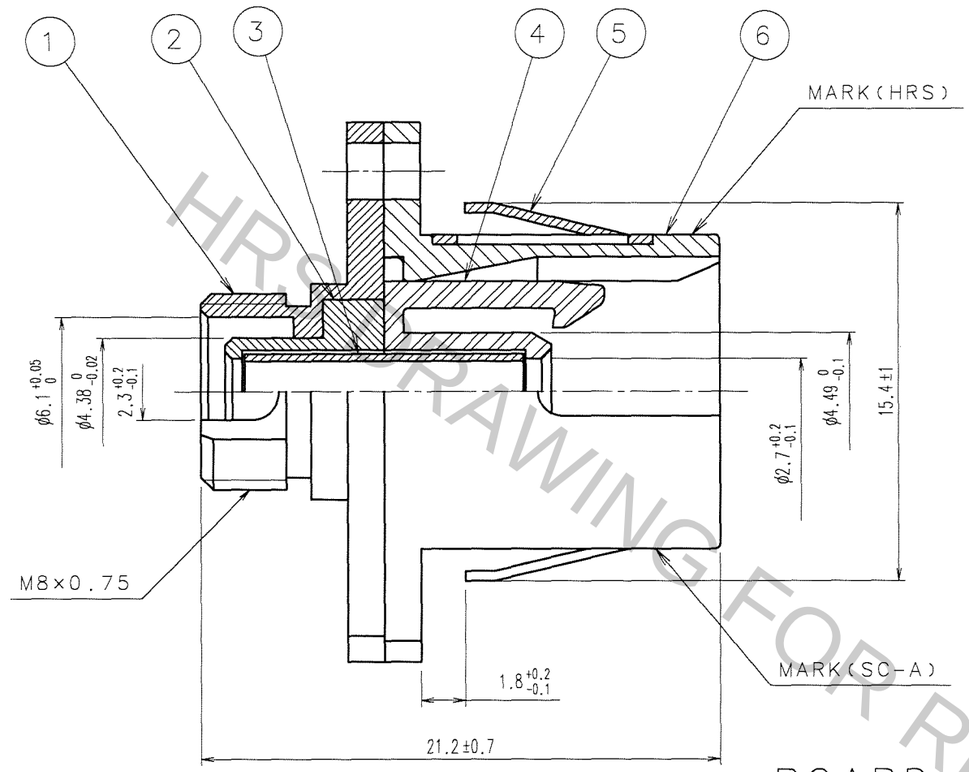

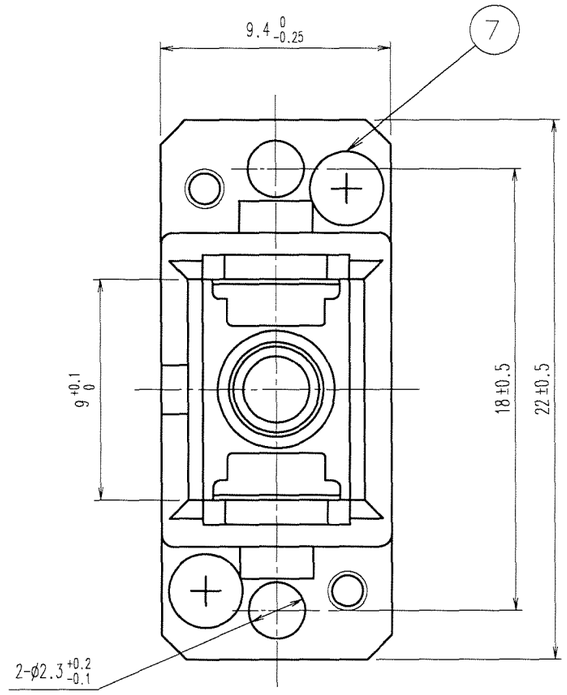

BOARD THICKNESS: 1.6

NOTE 1 Strong scoop by FC connector plug may cause breaking of the zirconia sleeve.
2 A product corresponding to RoHS.

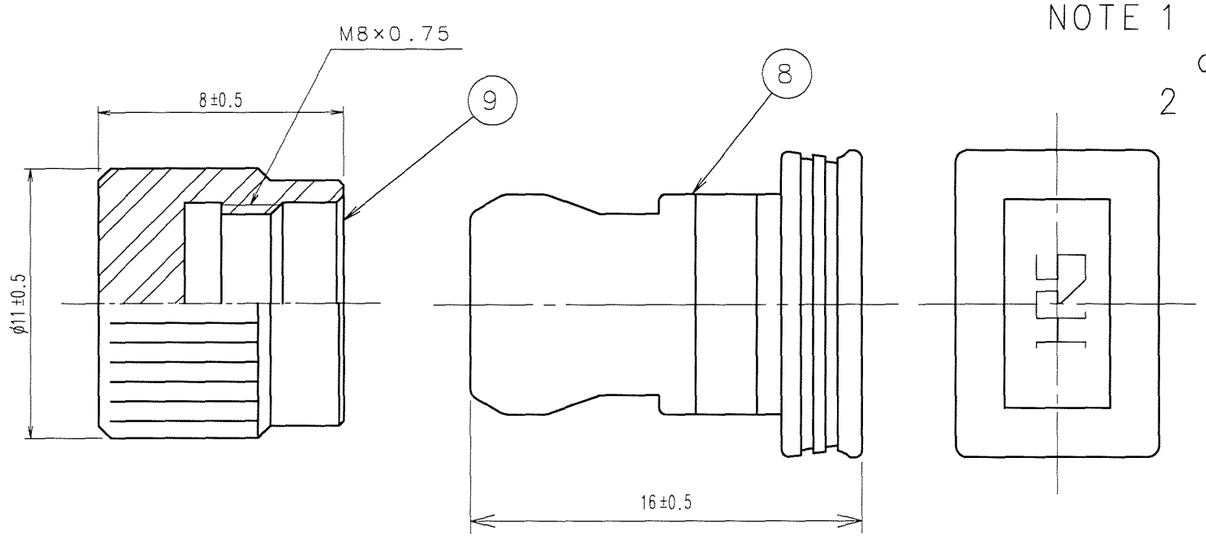

NO.	MATERIAL	FINISH, REMARKS	NO.	MATERIAL	FINISH, REMARKS
5	STAINLESS STEEL	———			
4	SYNTHETIC RESIN	BLUE	9	SYNTHETIC RESIN	WHITE
3	ZIRCONIA	———	8	SYNTHETIC RESIN	BLACK
2	STAINLESS STEEL	———	7	COPPER ALLOY	NICKEL PLATING
1	BRASS	NICKEL PLATING	6	ZINC ALLOY DIECAST	NICKEL PLATING

CODE NO.(OLD)	DRAWN	DESIGNED	CHECKED	APPROVED	RELEASED
CL799-2614-3	S.TOYOKAWA 08.3.6	T.SATO 08.3.6	F.YOSHI 08.3.14	H.OKANO 08.3.14	

SCALE 4 : 1
UNITS mm

DRAWING NO. EDC3-173383-40

PART NO. HSCJ-HRFCJ-CD1(40)

HRS HIROSE ELECTRIC CO.,LTD.

CODE NO. CL704-0391-2-40

1/1

FORM NO.229

TO

HRS DRAWING FOR REFERENCE