**MICRO SWITCH**
a Honeywell Division
FED. MFG. CODE 91929

# SWITCH–TOGGLE

CATALOG LISTING
102TL2260 SERIES
CHART 1

THIS DRAWING COVERS A PROPRIETARY ITEM AND IS THE PROPERTY OF MICRO SWITCH. A DIVISION OF HONEYWELL. THIS DRAWING IS NOT TO BE COPIED OR USED WITHOUT THE APPROVAL OF MICRO SWITCH

| CATALOG LISTING | CIRCUIT MADE WITH TOGGLE LEVER IN (5) | | | CURRENT CAPACITY (AMPS) | | | | | | | | |
|---|---|---|---|---|---|---|---|---|---|---|---|---|
| | KEYWAY SIDE (1–2, 4–5) | CENTER (1–2, 4–5) | OPPOSITE KEYWAY (2–3, 5–6) | RESISITIVE LOAD | | | | | LAMP LOAD | | INDUCTIVE LOAD | |
| | | | | DC VOLTS | | | AC VOLTS | | | | | |
| | | | | 28 | 125 | 250 | 125 | 250 | 28 VDC | 125 VAC | 28 VDC | 125 VAC |
| 102TL2260–7 | MOM ON | OFF | MOM ON | 7.5 | .75 | .5 | 7.5 | 6 | 5 | 2 | 7.5 | 7.5 |

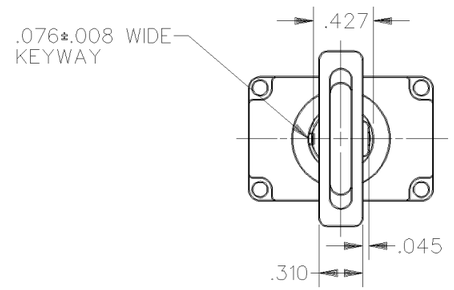


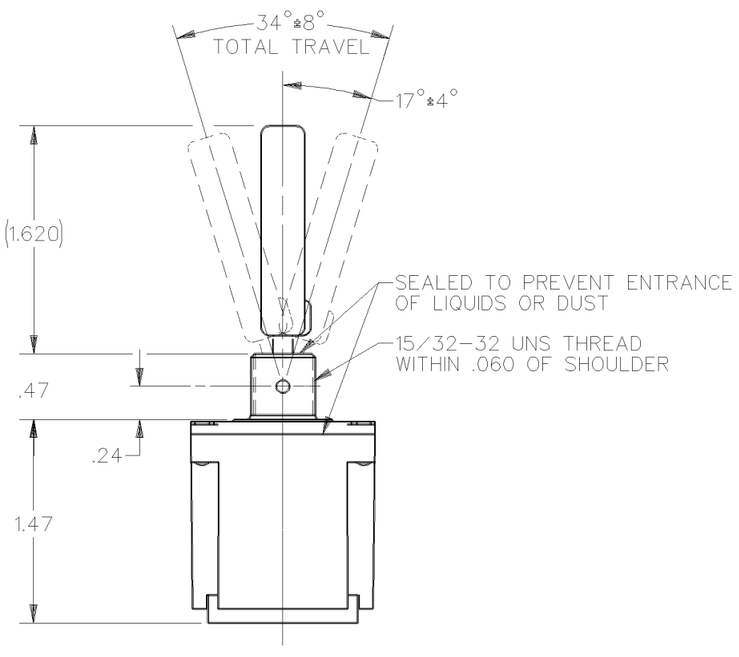


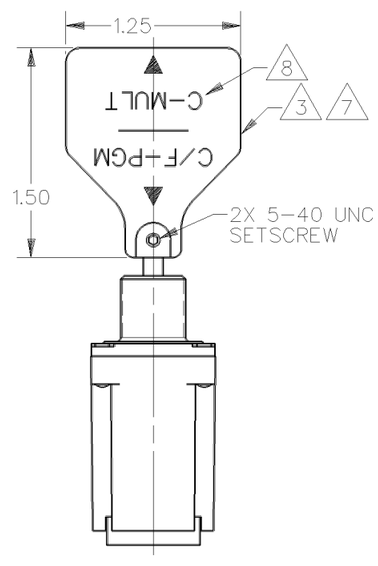


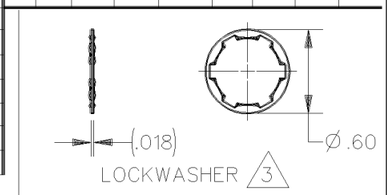


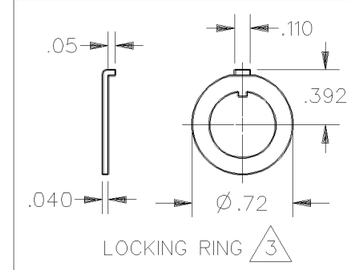


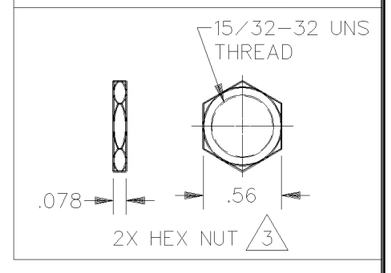


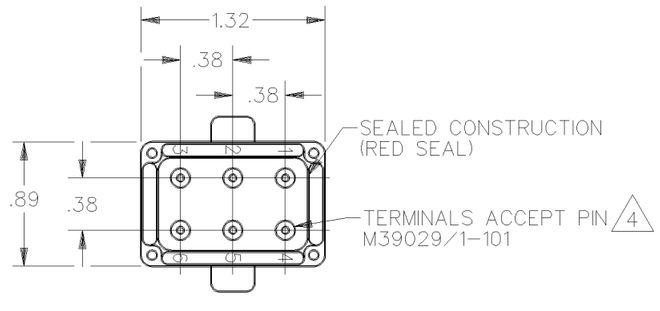


NOTES
1 – SWITCHES ARE CAPABLE OF WITHSTANDING A TEMPERATURE OF 160°F CONTINUOUSLY AT FULL RATED LOAD
2 – CIRCUIT DESIGNATION AND MICRO SWITCH CATALOG LISTING MARKED ON SIDE OF SWITCH
3 FURNISHED UNASSEMBLED
4 THE SEALING GROMMET SHALL SEAL ON A SMOOTH WIRE INSULATION OF Ø.040 TO .083 (16–20 GAGE)
5 APPLIES TO "ON" AND "MOMENTARY ON" POSITIONS
6 – UNUSED TERMINAL HOLES MAY BE SEALED WITH PLUGS M83723/28–20
7 BLACK ANODIZED ALUMINUM ALLOY
8 WHITE RECESSED MARKINGS .133±.008 HIGH WIDTH OF LINES PER MIL–M–18012 PAR 3.2.2.1 (C)
9 – SWITCHES MEET THE APPLICABLE REQUIREMENTS OF MIL–S–3950

THIRD ANGLE PROJECTION
SCALE FULL
DO NOT SCALE PRINT

**UNLESS OTHERWISE SPECIFIED TOLERANCES ARE**

| | | |
|---|---|---|
| ONE PLACE | (.0) | ±.030 |
| TWO PLACE | (.00) | ±.015 |
| THREE PLACE | (.000) | ±.005 |
| ANGLES | | ± |

WEIGHT .17 LB MAX

ANSI Y14.5M–1982 APPLIES

CATALOG LISTING 102TL2260 SERIES CHART 1
PAGE 1 OF 1
ISSUE 2
RELEASE NO. PR–21019
REPLACES
CHECK
REVISIONS
A PR–21019 T S M 15 MAR 94
CHECK
15 MAR 94
D A W 15 MAR 94
CHECK
T S M 15 MAR 94
DRAWN
DDM/CAD

MICRO SWITCH
a Honeywell Division
FED. MFG. CODE 91929

# SWITCH-TOGGLE

CATALOG LISTING
## 102TL2260 SERIES CHART 1

THIS DRAWING COVERS A PROPRIETARY ITEM AND IS THE PROPERTY OF MICRO SWITCH. A DIVISION OF HONEYWELL. THIS DRAWING IS NOT TO BE COPIED OR USED WITHOUT THE APPROVAL OF MICRO SWITCH

| CATALOG LISTING | CIRCUIT MADE WITH TOGGLE LEVER IN (5) | | | CURRENT CAPACITY (AMPS) | | | | | | | | |
|---|---|---|---|---|---|---|---|---|---|---|---|---|
| | | | | RESISITIVE LOAD | | | | | LAMP LOAD | | INDUCTIVE LOAD | |
| | | | | DC VOLTS | | | AC VOLTS | | | | | |
| | KEYWAY SIDE (1-2, 4-5) | CENTER KEYWAY (1-2, 4-5) | OPPOSITE (2-3, 5-6) | 28 | 125 | 250 | 125 | 250 | 28 VDC | 125 VAC | 28 VDC | 125 VAC |
| 102TL2260-7 | MOM ON | OFF | MOM ON | 7.5 | .75 | .5 | 7.5 | 6 | 5 | 2 | 7.5 | 7.5 |

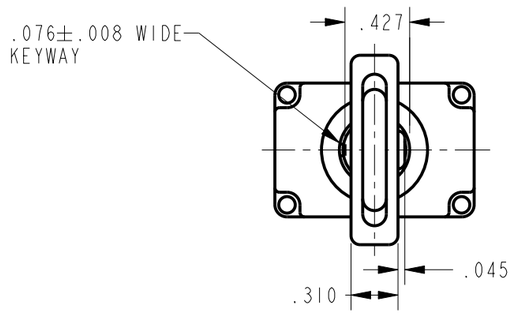


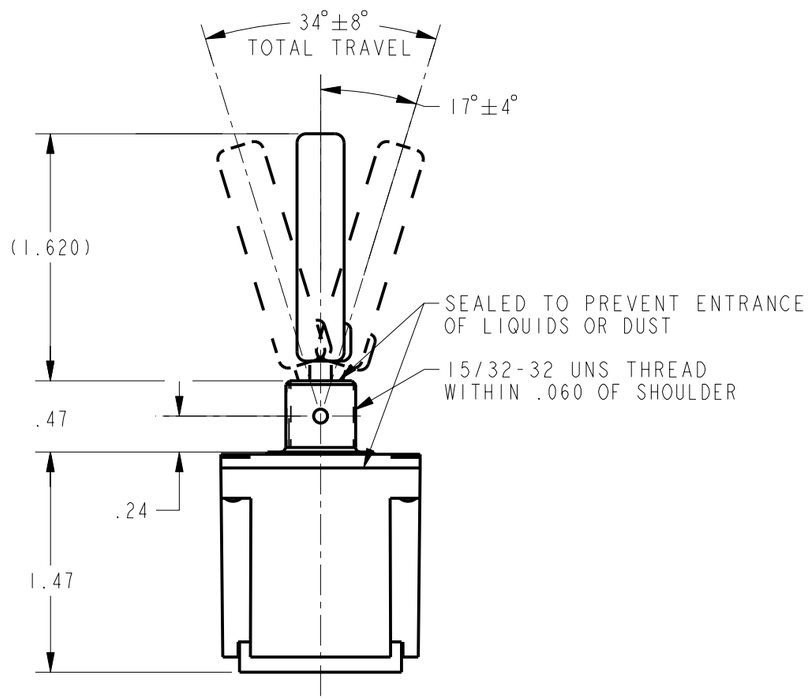


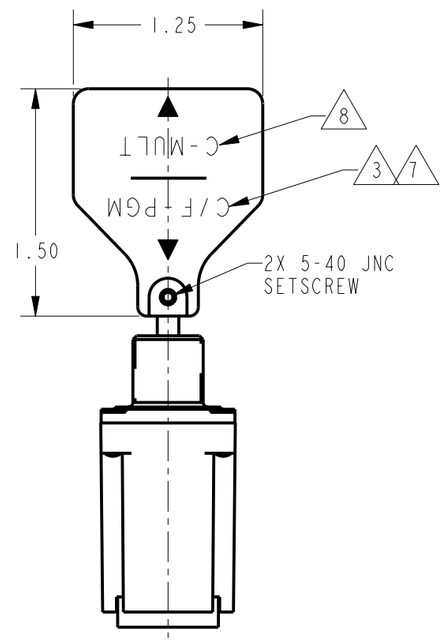


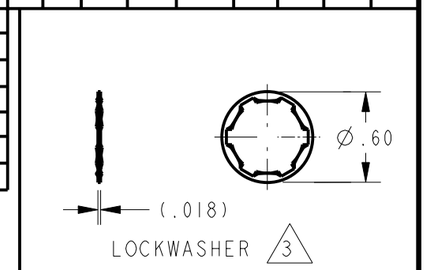


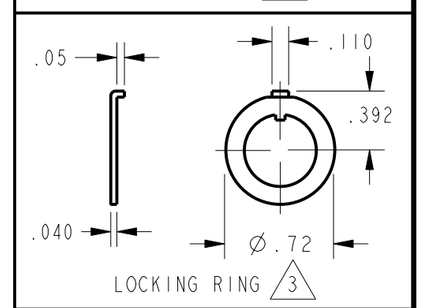


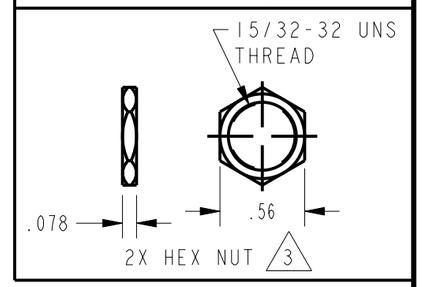


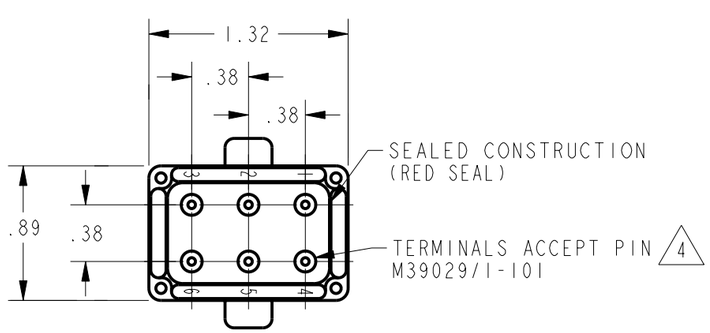


NOTES
1 - SWITCHES ARE CAPABLE OF WITHSTANDING A TEMPERATURE OF 180°F CONTINUOUSLY AT FULL RATE LOAD
2 - CIRCUIT DESIGNATION AND MICRO SWITCH CATALOG LISTING MARKED ON SIDE OF SWITCH
(3) FURNISHED UNASSEMBLED
(4) THE SEALING GROMET SHALL SEAL ON A SMOOTH WIRE INSULATION OF Ø.040 TO .083 (16-20 GAGE)
(5) APPLIES TO "ON" AND "MOMENTARY ON" POSITIONS
6 - UNUSED TERMINAL HOLES MAY BE SEALED WITH PLUGS M83723/28-20
(7) BLACK ANODIZED ALUMINUM ALLOY
(8) WHITE RECESSED MARKINGS .133±.008 HIGH WIDTH OF LINES PER MIL-M-18012 PAR 3.2.2.1 (C)
9 - SWITCHES MEET THE APPLICABLE REQUIREMENTS OF MIL-S-3950

THIRD ANGLE PROJECTION
SCALE FULL
DO NOT SCALE PRINT

| UNLESS OTHERWISE SPECIFIED TOLERANCES ARE | | |
|---|---|---|
| ONE PLACE | (.0) | ±.030 |
| TWO PLACE | (.00) | ±.015 |
| THREE PLACE | (.000) | ±.005 |
| ANGLES | | ± |

WEIGHT .17 LB MAX

ANSI Y14.5M-1982 APPLIES

CATALOG LISTING 102TL2260 SERIES CHART 1
PAGE 1 OF 1
RELEASE NO. PR-21019
REPLACES -
ISSUE 3
CHECK
REVISIONS
A 205757 DLT 23 MAY 02
CHECK
23 MAY 02 SAV
CHECK
23 MAY 02
PTC/CAD 2D
DRAWN DLT 23 MAY 02