THIS DRAWING IS UNPUBLISHED. RELEASED FOR PUBLICATION -,- .
© COPYRIGHT - By - ALL RIGHTS RESERVED.

LOC	DIST
AJ	16

REVISIONS

P	LTR	DESCRIPTION	DATE	DWN	APVD
	A1	REVISED PER ECO-11-005030	11MAR11	RK	HMR

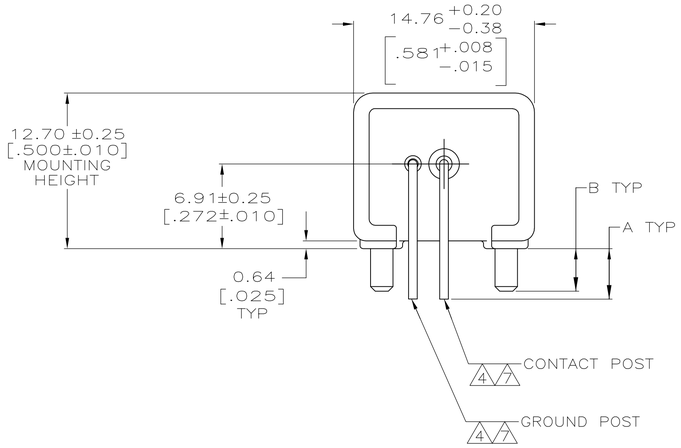

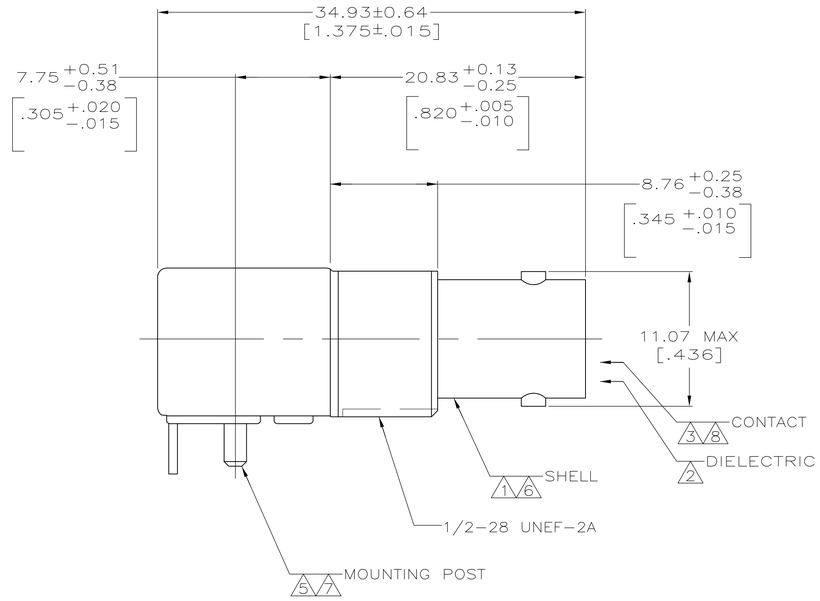

1. ZINC PER QQ-Z-363.
2. POLYMETHYLPENTENE, GENERAL PURPOSE.
3. BERYLLIUM COPPER PER QQ-C-530.
4. BRASS PER ASTM-B-453.
5. BRASS PER ASTM-B-16.
6. NICKEL PLATE PER QQ-N-290, 3.81 μm [.000150] MINIMUM THICK.
7. TIN PLATE PER ASTM-B-545, 3.81 μm [.000150] MINIMUM THICK.
8. GOLD PLATE PER ASTM-B-488, 0.76 μm [.000030] MINIMUM THICK.
9. SEE INSTRUCTION SHEET 408-2769.

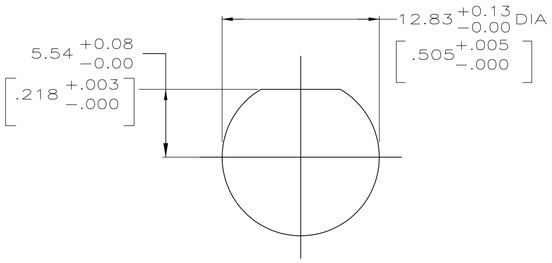

RECOMMENDED PANEL CUTOUT

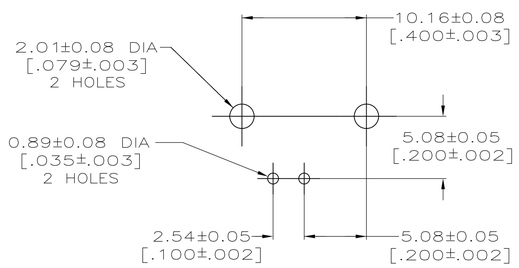

PCB CONFIGURATION

B	A	PART NUMBER
2.03±0.13 [.080±.005]	2.29±0.13 [.090±.005]	5414907-3
2.03±0.13 [.080±.005]	2.79±0.25 [.110±.010]	5414907-2
3.48±0.25 [.137±.010]	4.11±0.43 [.162±.017]	5414907-1

THIS DRAWING IS A CONTROLLED DOCUMENT.

DIMENSIONS: mm [INCHES]

TOLERANCES UNLESS OTHERWISE SPECIFIED:
0 PLC ± -
1 PLC ± -
2 PLC ± 0.20 [.008]
3 PLC ± -
4 PLC ± -
ANGLES ± -

MATERIAL: SEE NOTES 1 - 5
FINISH: SEE NOTES 6 - 8

DWN J. ALCORTA - DOCK5 26APR2005
CHK J. HAVENER 26APR2005
APVD J. LIPPERT 26APR2005
PRODUCT SPEC —
APPLICATION SPEC —
WEIGHT —

TE Connectivity

NAME: JACK, RIGHT ANGLE, 75 OHM, LOW PROFILE, PCB, BNC

SIZE	CAGE CODE	DRAWING NO	RESTRICTED TO
A1	00779	C-5414907	—

CUSTOMER DRAWING | SCALE 5:1 | SHEET 1 OF 1 | REV A1

4805 (3/11)