THIS IS A CONTROLLED DOCUMENT.

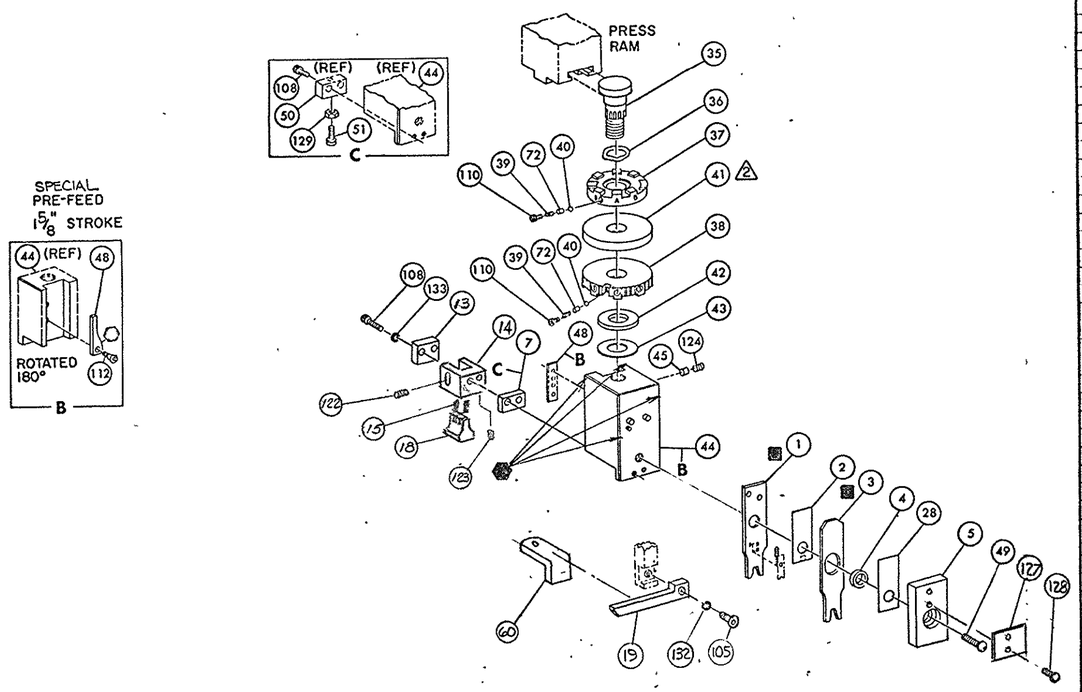

NOTES:

1.- ONLY THE ITEMS WITH QUANTITIES SPECIFIED ON PARTS LIST ARE USED ON THIS APPLICATOR.

2 -USED IN PLACE OF ITEM 38 WHEN INSULATION CRIMP IS NOT USED.

3 - FEED PIVOT - CENTER HOLE

4 PART NOT ON PRINT.

KEY:

■ -RECOMMENDED SPARE PARTS

● -GREASE WEEKLY

5 REPLACE LEFT STRIPPER AIR CYL P/N 462639-1 FOR GREATER WIRE SIZE IF USED ON S.C. P/N 463345-1 OR -2.

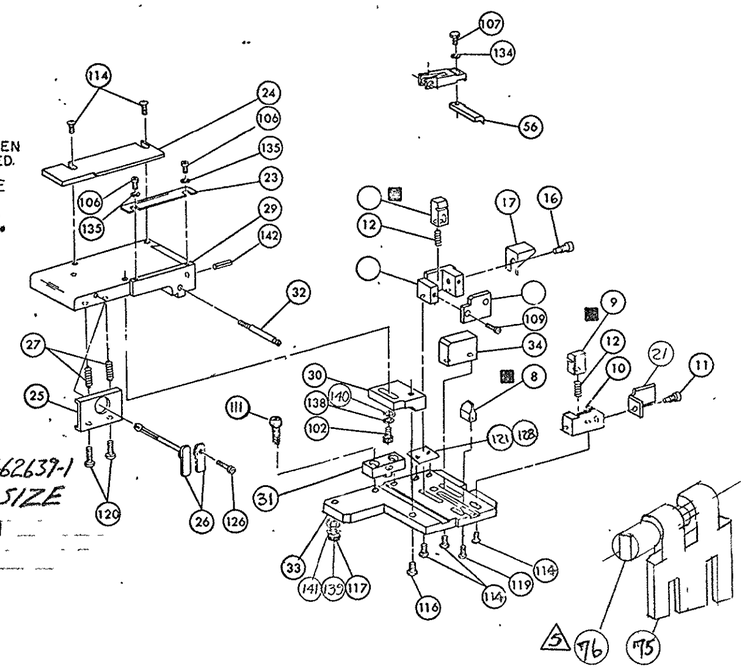

QTY	PART NO	DESCRIPTION	ITEM NO
~~1~~	~~453615-1~~	~~PLATE, TERMINAL NO.~~	145
~~2~~	~~690101-2~~	~~PLATE, SERIAL NO.~~	144
			143
1	4-21028-0	PIN, SLOT SPR (.093 DIA X .75) STR G PLATE	142
1	21899-2	WASHER, FLAT (NO 10) MOUNTING	141
1	21899-2	WASHER, FLAT (NO 10) S G ADJ BLOCK	140
1	21024-5	WASHER, LOCK (NO 10) MOUNTING	139
1	21024-5	WASHER, LOCK (NO 10) STRIP GUIDE ADJ BLOCK	138
			137
			136
2	21024-2	WASHER, LOCK (NO 4) FRONT STRIP GUIDE	135
REF	21024-4	WASHER, LOCK (NO 8) FEED FINGER	134
2	21024-4	WASHER, LOCK (NO 8) DEPRESSOR	133
REF	21024-4	WASHER, LOCK (NO 8) STRIPPER	132
			131
			130
—	21068-5	NUT, HEX MACH (6-32) HOLDDOWN	129
4	21017-2	SCR, DRIVE (#2 X .188 LG)	128
1	819347-1	PLATE, I.D.	127
—	22353-8	SCR, SHLD. (.187 DIA X .250 LG) DRAG LEVER	126
			125
1	21009-2	SCR, SKT SET (1/4-20 X .25) (LOC-WEL) RAM	124
1	2-21008-1	SCR, SKT. SET (4-40 X .25) (LOC-WEL) HOLD DOWN	123
1	4-21028-0	PIN, SLOT SPR. (.094 X .75)	122
1	690701-2	PLATE, I.D.	121
2	3-21002-0	SCR, BUT HD SKT CAP (10-32 X .88) DRAG	120
1	22733-8	SCR, BUT HD SKT CAP (8-32 X .38) (LOC-WEL) ANVIL	119
			118
1	3-21000-9	SCR, SOC HD SKT CAP (10-32 X 1.00) MOUNTING	117
1	2-21002-7	SCR, BUT HD SKT CAP (10-32 X .50) SG ADJ BLOCK	116
~~4~~	~~22733-9~~	~~SCR, BUT HD SKT CAP (8-32 X .50) SHEAR~~	115
6	2-21002-2	SCR, BUT HD SKT CAP (8-32 X .50) R STRIP GUIDE	114
			113
1	1-21002-7	SCR, BUT HD SKT CAP (6-32 X .50) CAM	112
2	2-21000-7	SCR, SKT HD CAP (8-32 X .50) SCR. BLOCK	111
2	23030-1	SCR, SKT HD CAP (6-32 X .25) (LOC-WEL) CP DISC	110
		SCR, SKT HD CAP (6-32 X) REAR SHEAR PLATE	109
2	3-21000-0	SCR, SKT HD CAP (8-32 X .88) DEPRESSOR (REAR)	108
REF	2-21002-1	SCR, BUT HD MACH (8-32 X .38) FEED FINGER	107
2	1-21000-3	SCR, SKT HD CAP (4-40 X .25) F STRIP GUIDE	106
REF	2-21002-1	SCR, BUT HD CAP (8-32 X .38) STRIPPER	105
			104
			103
1	3-22603-1	SCR, HEX HD CAP (10-32 X .38) SG ADJ BLOCK	102
			101
			79
			78
2	463310-4	BLADE, STRIPPING (*/8) 4 5	77
REF	684520-1	GRIPPER CYLINDER SUB ASSY. 5	76
REF	813204-1	MOUNT STRIPPER	75
			74
			73
1	690603-1	SPRING, ASSIST	72
			71
			70
			69
			68
			67
			66
			65
			64
			63
			62
			61
REF	469484-1	STOP, WIRE	60

QTY	PART NO	DESCRIPTION	ITEM NO
REF	694433-8	PAWL FEED	59
			58
			57
			56
			55
			54
			53
			52
		BUMPER, HOLDDOWN	51
		SPACER, TONKER	50
1	7-21002-9	BOLT, CRIMPER (BUT. HD. 5/16-24 UNF X 100)	49
1	690602-6	CAM PRE FEED 1.62 STROKE	48
			47
			46
1	690191-1	PLUG, NYLON	45
1	455673-1	RAM	44
1	690125-1	WASHER, LAMINATED	43
1	690124-9	WASHER, RAM	42
		DISC, SPACER	41
2	23241-6	BALL, STEEL	40
2	690170-1	SPRING, COMPRESSION	39
1	690142-1	DISC, INSULATION	38
1	6-690692-3	DISC, WIRE	37
1	22480-5	WASHER, SPRING	36
1	690212-1	POST, RAM	35
1	692776-4	SUPPORT, TERMINAL	34
1	462544-1	PLATE, BASE SPECIAL	33
1	690432-3	SCREW, ADJUSTMENT	32
1	462543-1	BLOCK, SCREW SPECIAL	31
1	455689-1	BLOCK, STRIP GUIDE ADJ	30
1	455671-4	PLATE, STRIP GUIDE	29
1	1-455888-0	SPACER, FRONT SHEAR DEPRESSOR	28
2	1-22284-0	SPRING, DRAG	27
1	690546-1	LEVER, DRAG RELEASE	26
1	240792-5	DRAG, STOCK	25
1	690504-6	GUIDE STRIP (REAR)	24
1	690438-1	GUIDE, STRIP (FRONT)	23
			22
1	463756-1	GUIDE, SCRAP	21
			20
REF	462615-1	STRIPPER	19
1	459551-1	HOLDER, TERMINAL	18
		GUARD, CHIP (REAR)	17
		STOP, SHEAR (REAR)	16
2	3-22278-0	SPRING, HOLD DOWN	15
1	455052-1	HOLDER, DEPRESSOR	14
1	455053-1	PLATE, RETAINING	13
1	5-22280-0	SPRING, SHEAR	12
1	690461-2	STOP, SHEAR (FRONT)	11
1	462548-1	HOLDER, SHEAR (FRONT) SPECIAL	10
1	462547-1	SHEAR, FLOAT (FRONT) SPECIAL	9
1	2-690471-9	ANVIL	8
1	4-240641-2	SPACER, HOLD DOWN	7
		DEPRESSOR, SHEAR (REAR)	6
1	462838-1	DEPRESSOR, SHEAR (FRONT) SPECIAL	5
1	238011-7	SPACER, TUBULAR, INS CRIMPER	4
1	456134-5	CRIMPER, INSULATION	3
1	455888-5	SPACER, CRIMPER	2
1	3-456406-3	CRIMPER, WIRE	1

CRIMPING DATA

VISIBLE PAD LTR	CRIMP HEIGHT	WIRE SIZE	WIRE STRIP LENGTH
A	.052	18	
B	.047	20	
C	NOT	USED	
D	.059	16	

CRIMP	SIZE	TYPE	FEED	APPL INST
WIRE	.090	F	.430	A1
INSUL	.130	F		

WIRE RANGE	INSULATION RANGE	PRESS NO
20-16	.130 MAX.	463345-1

REMARKS

14 AWG NOT RECOMMENDED

APPLICATOR WILL APPLY

PIN	SOCKET
61118	61117
350218	350217
350654	350536
350687	
926887	
926883	
926882	

REMARKS	NO	REV
	TO APPLY TERMINAL SPEC 114-1011	
APPL USED ON MACHINE PART NO	MACH SERIAL NO	DISTRIBUTION
CUSTOMER NAME	APPL SERIAL NO	ORIGINAL
ADDRESS	PURCHASE ORDER	CUSTOMER COPY
CITY	ENG APP	FIELD ENG COPY

PF	LTR	REVISION RECORD	APP	DATE
	K	0150-0369-04		3-04
	J	0150-0511-03		5-03
	J	0150-0659-01		6-01
	H	0150-8254-98		1-98
	G	0150-7553-97		7-97
	F	0150-7491-97		1-97

PF	LTR	REVISION RECORD	APP	DATE
	E	0150-6301-95		7/95
	D1	ECN A-343541		
	D	ECN A-045888		2-86
	C	REV 26798		7-86
	B	REV. PER ECN R-5005		
	A02	REV. PER ECN R-3858		
	A01	REV PER R-2091		

SIM 687763-2

SET UP GAGE 10-1 / 197 HD

DR 3-18-77 APP 3-17-77 REL

HK 5/77

NAME AMPOMATIC STRIPPER CRIMPER APPLICATOR

SIDE FEED (M&L PIN & SOCKET)

AMP INCORPORATED Harrisburg Pa

LOC A C NO 466920-1 K

CASE CODE 00779

CUSTOMER AND ASSEMBLY DRAWING

RESTRICTED TO

DIST 66

* Trademark of AMP Incorporated

AMP 2083-3 (8-73)

-TKO-DRAWING-10-DIR-0.85/REV-

COPYRIGHT 2000 BY AMP INCORPORATED ALL RIGHTS RESERVED

RELEASED FOR PUBLICATION 11 22 JUNE 2001