MODEL NO.	PACKAGING
147-0701-211	ONE PCS PER BAG

REV	ECO	DATE
001	ECO-17-0032	11/28/2017

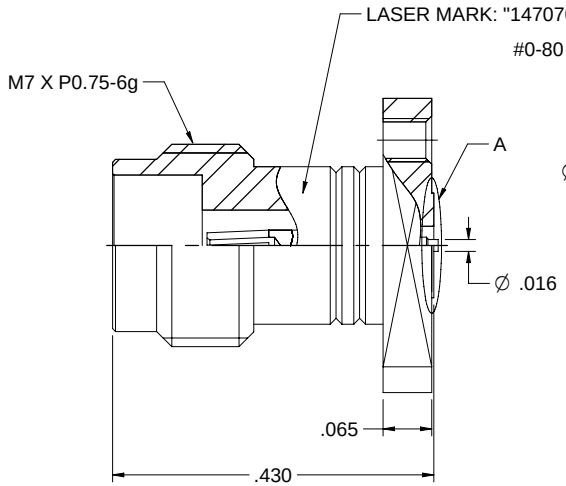

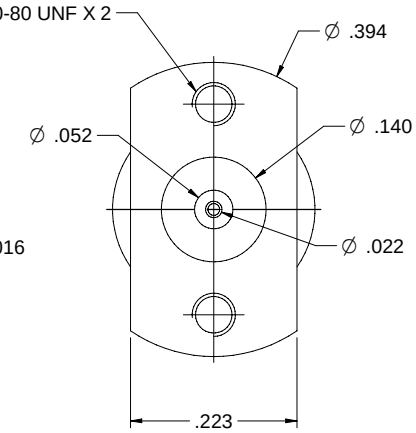

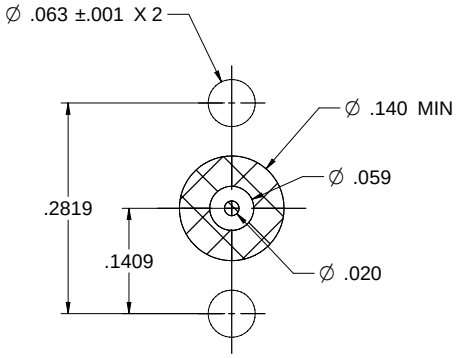

RECOMMENDED MOUNTING PATTEN

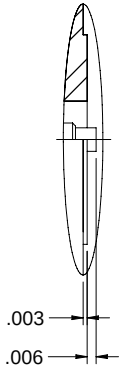

A DETAIL (10/1)

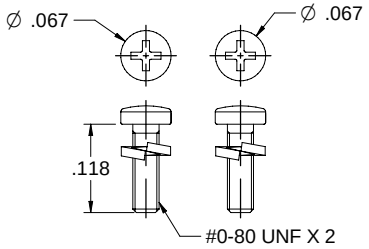

SCALE (3/1)

NOTES: UNLESS OTHERWISE SPECIFIED

1. MATERIAL & FINISH:
   1.1 BODY: PASSIVATED STAINLESS STEEL
   1.2 CONTACT PIN : GOLD PLATED BERYLLIUM COPPER
   1.3 INSULATOR: PTFE WHITE
   1.4 WASHER: STAINLESS STEEL
   1.5 BOLT: SUS302

2. ELECTRICAL:
   2.1 IMPEDANCE: 50 OHMS
   2.2 FREQUENCY RANGE: 0-50 GHz
   2.3 INSULATION RESISTANCE: 5000 MOHM MIN
   2.4 CONTACT RESISTANCE:
      2.4.1 CENER CONTACT: 4 MILLIOHM MAX
      2.4.2 OUTER CONTACT: 2.5 MILLIOHM MAX
   2.5 DIELECTRIC WITHSTANDING VOLTAGE: 500VRMS MIN

3. MECHANICAL:
   3.1 ENGAGEMENT/ DISENGAGEMENT FORCE: 0.23 NM MAX
   3.2 CONTACT RETENTION: 20 N MIN
   3.3 DURABILITY: 500 CYCLES MIN

4. ENVIRONMENT:
   4.1 THERMAL SHOCK: MIL-STD-202, METHOD 107, CONDITION B.
   4.2 OPERATING TEMPERATURE: -55 TO 125°C
   4.3 SALT SPRAY: MIL-STD-202, METHOD 101, CONDITION B
   4.4 SHOCK: MIL-STD-202, METHOD 213, CONDITION I
   4.5 VIBRATION: MIL-STD-202, METHOD 204, CONDITION D
   4.6 MOISTURE RESISTANCE: MIL-STD-202, METHOD 106

cinch
This PROPRIETARY Document is property of Cinch Connectivity Solutions. Unauthorized use, reuse, and reproduction, and/or disclosure of this document or understanding that it is not authorized and/or permission to make it known.
INTERPRETATION OF DRAWINGS IN ACCORDANCE WITH ASME Y14.5-2009.

Model No. 147-0701-211		Johnson
RoHS2 2011/65/EU	Cage Code	Title: PC MOUNT JACK,2 HOLE FLANGE, FOR 1.57mm TO 2.79mm BOARD THICKNESS, 2.4mm
UNLESS OTHERWISE SPECIFIED UNITS: INCH .XXX ±.02 .XXXX ±.01 ANGLES ±5°	3RD ANGLE PROJECTION	Drawing No. 147-0701-211 — Rev. 001
	Drawn by: Betty.Yu	
	Date: 10/19/2017	Size C — DO NOT SCALE DRAWING — Workmanship Std. NONE — Sheet 1 of 1