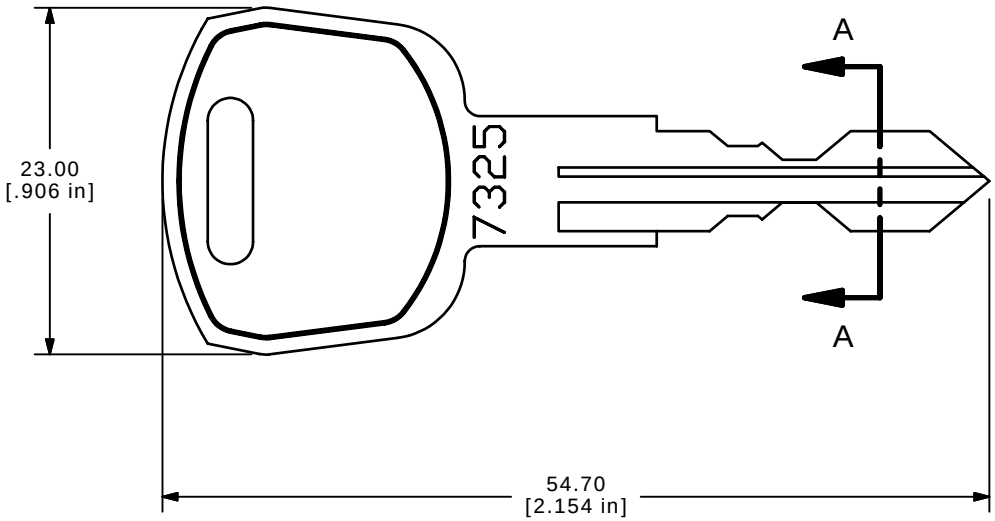

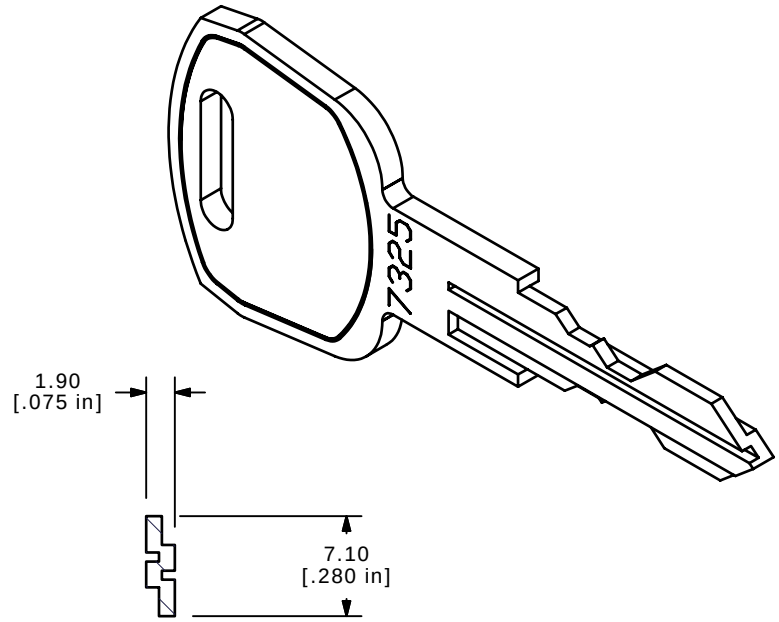

SECTION A-A
SCALE 2 : 1

NOTES:
1. ALL DIMENSIONS IN MM [INCH]
2. GENERAL TOLERANCE: x.x=±0.4
   x.xx=±0.25
3. MATERIAL: BRASS W/NICKLE PLATE
4. REVERSIBLE DOUBLE CUT

REV	PCR NO	DESCRIPTION	DATE	BY
D	16168	UPDATE TEETH ON KEY	6/21/06	CT
C	16152	ADD ENGRAVING	6/15/06	CT
B	16069	REVISED AND REDRAWN	5/31/06	CT

THE INFORMATION CONTAINED IN THIS DOCUMENT IS PROPRIETARY TO E-SWITCH AND IS NOT TO BE COPIED OR TRANSFERRED

E-SWITCH®

TITLE KOKEY7325 (KO119A)

SCALE	DATE	DR	DWG	REV
2:1	12/28/2005	PH	K900018	D