THIS DRAWING IS UNPUBLISHED. RELEASED FOR PUBLICATION -,- .
© COPYRIGHT - BY TYCO ELECTRONICS CORPORATION. ALL INTERNATIONAL RIGHTS RESERVED.

PART NUMBER	REV	FIRST USED
680291-1	D	565435-5
680291-2	D	354500-1

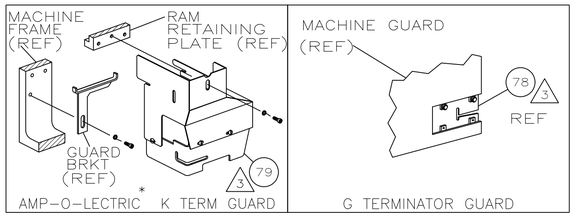

TERMINAL NAME: AMPLIVAR SPLICE

280002
280003

CRIMPING DATA

PAD LTR	CRIMP HEIGHT	WIRE SIZE, CMA
A	.074 ±.002 [1.88 ±0.05mm]	5000-4100 (5)
B	.069 ±.002 [1.75 ±0.05mm]	4100-3300 (6)
C	.064 ±.002 [1.63 ±0.05mm]	3300-2400 (7)
D	.059 ±.002 [1.50 ±0.05mm]	2400-1600 (8)

CRIMP	SIZE	TYPE	RANGE
WIRE	.110 [2.79mm]	F	1500-5000
INSUL	-	-	-

WIRE STRIP LENGTH	TERM APPL SPEC	FEED	APPL INSTRUCTION	SET UP GAGE	LAYOUT
-	114-2002	.315	408-8039	458638-1	-

LOC	DIST
A	66

REVISIONS

P	LTR	DESCRIPTION	DATE	DWN	APVD
	D	ECR-09-011924	5-2009	MY	TE

-1	BENCH MODEL K	AIRFEED
-2	BENCH MODEL G	AIRFEED

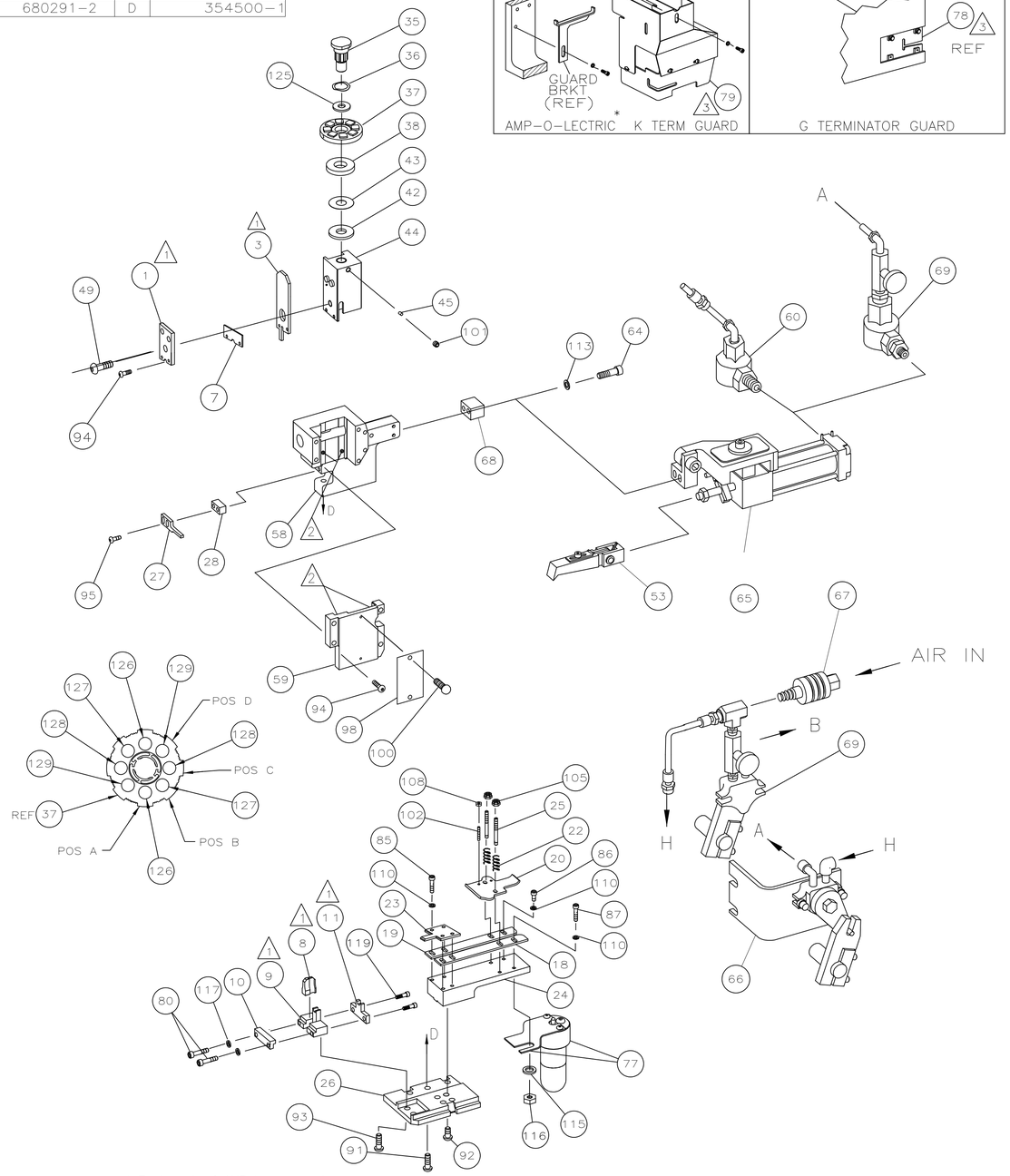

* Trademark of AMP Incorporated

-2	-1	U/M	PART NO	DESCRIPTION	ITEM NO
2	2	-	1-354779-4	PIN, WIRE DISC (.3060)D	129
2	2	-	9-354778-9	PIN, WIRE DISC (.2990)C	128
2	2	-	9-354778-3	PIN, WIRE DISC (.2960)B	127
2	2	-	8-354778-1	PIN, WIRE DISC (.2900)A	126
1	1	-	986950-1	WASHER, FLAT PRECISION	125
					124
					123
					122
					121
					120
2	2	-	1-21002-6	SCR,BHC (6-32X .25)PLATE,STR GUI	119
					118
4	4	-	21024-3	WASHER,LOCK(NO.6)SHEAR PL	117
1	1	-	21018-6	NUT, HEX (8-32)LUBE	116
1	1	-	21055-6	WASHER,FLAT #8 LUBE	115
					114
2	2	-	21024-5	WASHER,LOCK(#10)AIR ASSY	113
					112
2	2	-	4-21000-2	SCR,SHC(10-32X 2.00)AIR FEED BRKT	111
3	3	-	21024-4	WASHER,LOCK(NO.8)SHEAR BL	110
					109
2	2	-	21018-4	NUT,HEX(4-40)DRAG	108
					107
					106
2	2	-	21022-2	NUT,HEX SL(8-32)DRAG STUD	105
					104
					103
2	2	-	4-21078-8	SKT SKT SET (4-40x.75)DRAG	102
1	1	-	21009-2	SCR,SKT SET(1/4-20x.25)RAM	101
2	2	-	21017-2	SCR,DRIVE(#2x.19)ID PLATE	100
					99
1	1	-	464249-1	PLATE, IDENTIFICATION	98
					97
					96
2	2	-	8-21002-9	SCR,BHC(8-32X1.00)STRIPPER	95
6	6	-	2-21002-9	SCR,BHC(10-32x.75)CAP	94
2	2	-	2-21002-6	SCR,BHC(10-32x.38)ANVIL BODY	93
4	4	-	3-21002-4	SCR,BHC(1/4-20x.62)ST GD PL	92
3	3	-	2-22733-8	SCR,BHC(1/4-20x.62)HSG	91
					90
					89
					88
1	1	-	2-21000-9	SCR,SHC(8-32X.75)LUBE	87
1	1	-	2-21000-6	SCR,SHC(8-32x.38)STRIP GUIDE	86
4	4	-	2-21002-2	SCR,BHC(8-32x.50)R STRIP GUIDE	85
					84
					83
					82
					81
2	2	-	1-21000-9	SCR,SKT CAP(6-32x.38)SH PL	80
-	1	-	460980-2	GUARD ASSY	79
REF	-	-	679532-1	INSERT, GUARD	78
1	1	-	1-465184-7	LUBRICATOR ASSY	77
					76
					75
-	1	-	22317-3	ELBOW, COPPER TUBE	74
					73
					72
					71

QTY REQD PER ASSY — PARTS LIST

-2	-1	U/M	PART NO	DESCRIPTION	ITEM NO
					70
-	1	-	455350-1	AIR BLAST ASSY	69
1	1	-	461690-1	SPACER, AIR FEED	68
-	1	-	24042-2	VALVE, SHUT OFF	67
-	1	-	692655-1	AIR FEED VALVE ASSY	66
1	1	-	460277-1	AIR FEED ASSY (1 INCH)	65
2	2	-	4-21000-3	SCR,SHC(10-32x2.00)AIR ASSY	64
					63
					62
					61
1	-	-	692655-7	AIR FEED VALVE ASSY	60
1	1	-	462926-1	CAP, RAM	59
1	1	-	453736-1	HOUSING	58
					57
					56
					55
					54
1	1	-	2-460680-9	FEED FINGER ASSY	53
					52
					51
1	-	-	318848-1	AIR BLAST ASSEMBLY	50
1	1	-	7-21002-9	BOLT, CRIMPER (5/16x1.00)	49
					48
					47
-	1	-	689446-2	TUBE, AIR BLAST	46
1	1	-	690191-1	PLUG, NYLON	45
1	1	-	459586-1	RAM	44
1	1	-	690125-1	WASHER, LAMINATED	43
1	1	-	690124-4	WASHER, RAM	42
1	1	-	690223-2	SPACER,DISC	41
					40
					39
1	1	-	690223-2	SPACER, INSULATION DISC	38
1	1	-	354777-1	WIRE DISC, PLASTIC	37
1	1	-	22480-5	WASHER, SPRING	36
1	1	-	690212-1	POST, RAM	35
					34
					33
					32
					31
					30
					29
1	1	-	3-690451-9	SPACER, STRIPPER	28
1	1	-	460276-1	STRIPPER	27
1	1	-	459584-1	PLATE, BASE	26
2	2	-	22354-8	DRAG, STUD	25
1	1	-	462931-1	PLATE, STRIP GUIDE	24
1	1	-	462932-1	PLATE, STRIP HOLD DOWN	23
2	2	-	4-22281-1	SPRING, DRAG	22
					21
1	1	-	462925-1	DRAG, STOCK	20
1	1	-	462929-3	GUIDE, STRIP (REAR)	19
1	1	-	462930-3	GUIDE, STRIP (FRONT)	18
					17
					16
					15
					14
					13
					12
1	1	-	459684-1	PLATE,GUIDE RETAINER	11
1	1	-	459580-1	PLATE,ANVIL RETAINER	10
1	1	-	459583-1	BODY, ANVIL	9
1	1	-	459582-4	ANVIL	8
1	1	-	459581-1	BLADE, SLUG	7
					6
					5
					4
1	1	-	459587-1	CRIMPER GUIDE	3
					2
1	1	-	459585-1	CRIMPER, WIRE	1

QTY REQD PER ASSY — PARTS LIST

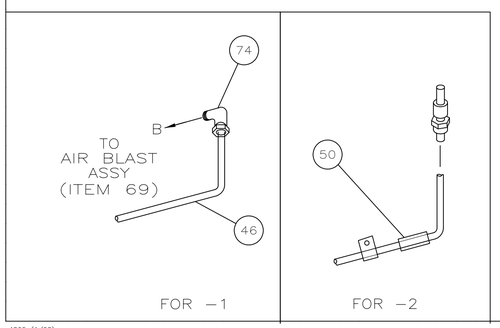

1. RECOMMENDED SPARE PARTS.
2. GREASE LIGHTLY.
3. GUARD MUST BE IN PLACE WHEN OPERATING APPLICATOR IN A BENCH MACHINE.
4. SEE DRAWING FOR COMPONENTS
5. USE 14 MAG WIRE FOR SET-UP ONLY.
6. USE 15 MAG WIRE FOR SET-UP ONLY.
7. USE 16 MAG WIRE FOR SET-UP ONLY.
8. USE 17 MAG WIRE FOR SET-UP ONLY.

THIS DRAWING IS A CONTROLLED DOCUMENT.

DIMENSIONS: INCHES

TOLERANCES UNLESS OTHERWISE SPECIFIED:
0 PLC ± -
1 PLC ± -
2 PLC ± .25
3 PLC ± -
4 PLC ± -
ANGLES ± -

MATERIAL -
FINISH -

DWN	JC BAKER	3/21/96
CHK	C.ERISMAN	3/21/96
APVD	T ELBIN	3/21/96

PRODUCT SPEC —
APPLICATION SPEC —
WEIGHT —

Tyco Electronics — Tyco Electronics Corporation, Harrisburg, PA 17105-3608

NAME: END FEED HDM APPLICATOR

SIZE	CAGE CODE	DRAWING NO	RESTRICTED TO
A1	00779	C-680291	—

CUSTOMER DRAWING — SCALE - — SHEET 1 OF 1 — REV D

4805 (1/08)

27MAY2009 10:32am