SMP-FS-C07	REVISIONS				
DRAWING NO.	REV	DESCRIPTION	DATE	ECO	APPR
THIRD ANGLE PROJ.	A	RELEASE TO MFG	2/25/05	45420	MAH
	B	CABLE STRIPPING DIM IS ADDED	7/23/07	46640	NBP

NOTES:
1. MATERIALS AND FINISHES:
   BODY - BeCu, GOLD PLATING, .000030 [0.8] THICK OVER NICKEL
   CONTACT - BeCu, GOLD PLATING, .000050 [0.8] THICK OVER NICKEL
   INSULATOR - PTFE
   DIELECTRIC SPACER - PTFE
2. ELECTRICAL:
   A. IMPEDANCE: 50 OHM
   B. FREQUENCY RANGE: DC - 26.5 GHz
   C. VSWR(RETURN LOSS): 1.2 (20.8 dB), MAX. DC-18GHz
      1.35 (16.5 dB), MAX. 18-26.5GHz
   D. DIELECTRIC WITHSTANDING VOLTAGE: 500 VRMS, MIN.
3. PHYSICAL:
   A. DURABILTIY: 100 CYCLES MIN.
   B. ENGAGEMENT FORCE: 15 LB [67 N] MAX
   C. DISINGAGEMENT FORCE: 2 LB [9 N] MIN
   E. TEMERATURE RANGE: -65° C TO 165° C
4. PACKAGING:
   A. QUANTITY: SINGLE PACK
   B. MARKING: , AMPHENOL, SMP-FS-C07, DATE CODE
5. SEE AMPHENOL SPEC 349-50685 FOR CABLE ASSEMBLY INSTRUCTIONS.

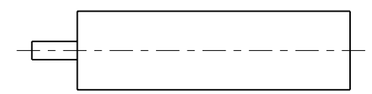

RECOMMENDED
CABLE STRIPPING DIM
SCALE 6.000

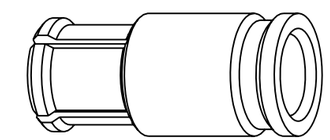

SCALE 6.000

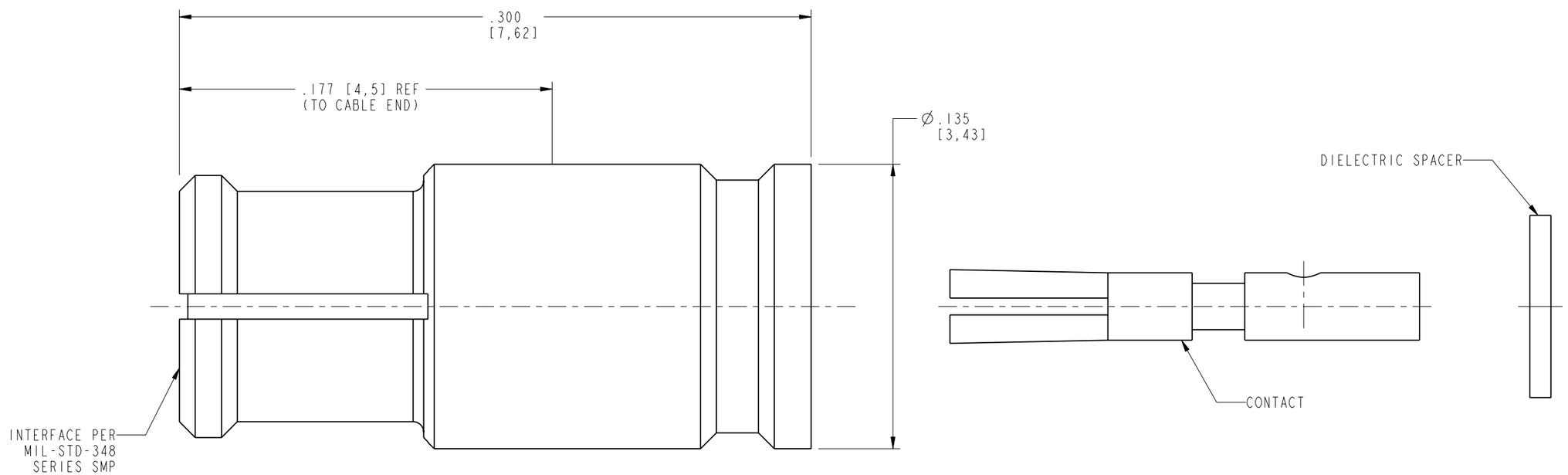

CUSTOMER OUTLINE DRAWING
ALL OTHER SHEETS ARE FOR INTERNAL USE ONLY

UNLESS OTHERWISE SPECIFIED, DIMENSIONS ARE IN INCHES AND TOLERANCES ARE:
2 PLACE DECIMAL ±.015 (0,381 mm) | 3 PLACE DECIMAL ±.005 (0,127 mm) | ANGLES ± 1°

NOTICE - These drawings, specifications, or other data (1) are, and remain the property of Amphenol Corp. (2) must be returned upon request; and (3) are confidential and not to be disclosed to any person other than those to whom they are given by Amphenol Corp. The furnishing of these drawings, specifications, or other data by Amphenol Corp., or to any other person to anyone for any purpose is not to be regarded by implication or otherwise in any manner licensing, granting rights or permitting such holder or any other person to manufacture, use or sell any product, process or design, patented or otherwise, that may in any way be related to or disclosed by said drawings, specifications, or other data.

MATERIAL

REFERENCE
GEN# ASSYF2_SMP
EAR# 967585-1 &1693
615X-1633-100

DRAWN M. HOYACK	DATE 02-Oct-01	
ENGINEER O. BARTHELMES	DATE 15-Feb-01	
APPROVED OWEN BARTHELMES	DATE 2/23/05	
CAD FILE I:\SMP\SMP-FS-C07	CODE ID 74868	DWG SIZE B

TITLE
ASSEMBLY
SOCKET CONTACT
TO .086 S/R CABLE

Amphenol RF
Danbury, CT, USA
Tainan, Taiwan
Shenzhen, China
www.amphenolrf.com

SCALE: 18.0:1 | SHEET 2 OF 2

DRAWING NO. SMP-FS-C07 | REV B