THIS DRAWING IS UNPUBLISHED. RELEASED FOR PUBLICATION 19
© COPYRIGHT 20 - ALL RIGHTS RESERVED.

| LOC | DIST |
|---|---|
| IR | - |

REVISIONS

| P | LTR | DESCRIPTION | DATE | DWN | APVD |
|---|---|---|---|---|---|
| | C | HOUSING RAW MATERIAL CHANGED TO LCP | 18NOV2011 | PS | RRP |

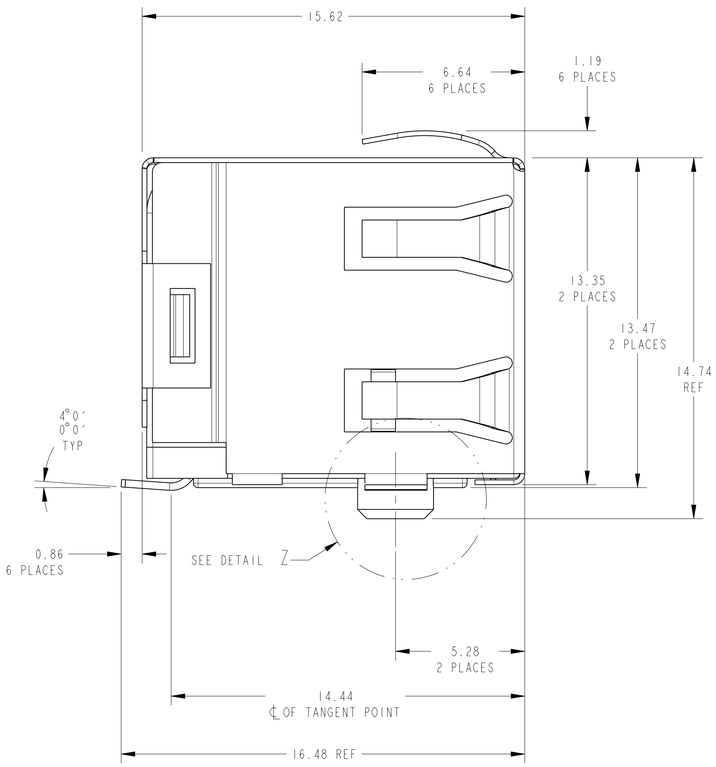


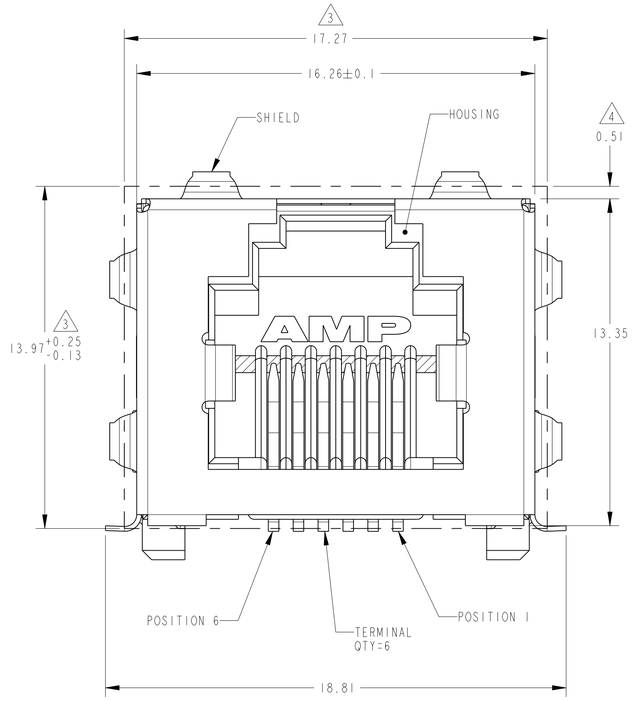


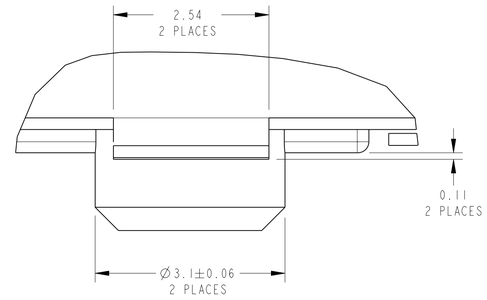


DETAIL Z
SCALE 20:1

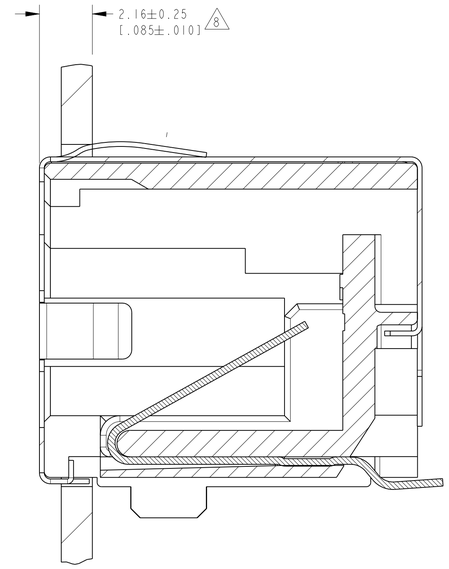


1. MATERIAL:
HOUSING - HIGH TEMPERATURE THERMOPLASTIC - LCP, BLACK, UL94V-0.
TERMINALS - 0.30 THICK PHOS BRONZE PLATED WITH 2.03µm MINIMUM THICK MATTE TIN IN SOLDER AREA. 1.27µm GOLD IN LOCALIZED PLATE AREA. ENTIRE TERMINAL PLATED WITH 1.27µm THICK NICKEL.
SHIELD - 0.196 THICK BRASS PREPLATED WITH 2.03µm-3.81/um THICK MATTE TIN OVER 0.76µm-2.03µm NICKEL UNDERPLATE.

2. JACK CAVITY CONFORMS TO FCC RULES AND REGULATIONS PART 68, SUBPART F.

3. SUGGESTED PANEL OPENING DIMENSIONS. SEE APPLICATION SPEC. 114-2154 FOR PANEL THICKNESS AND POSITION RECOMMENDATIONS.

4. SUGGESTED CLEARANCE BETWEEN TOP OF CONNECTOR AND TOP PANEL OPENING.

5. PACKAGED: POCKET TAPE & REEL (PER EAI 481 SPECIFICATIONS)

POCKET TAPE WIDTH - 44mm
POCKET PITCH - 24mm
POCKET DEPTH - 16.7mm

CLEAR COVER TAPE, PSA
CLEAR COVER TAPE TRAILER - 1220mm, WRAPPED ON REEL HUB

PLASTIC REEL - 381mm DIAMETER

PRODUCT QUANTITY - 200 PIECES PER REEL

6. ZERO INSERTION FORCE POST WITH RECOMMENDED PCB LAYOUT.

7. DATUM ESTABLISHED BY CUSTOMER.

8. CONNECTOR SHOULD BE POSITIONED THRU PANEL CUTOUT AS SHOWN TO SUPPORT TOP OF MODULAR JACK FOR STRAIN RELIEF

9. MANUFACTURING DATE CODE LOCATED APPROXIMATELY AS SHOWN. FIRST 2 DIGITS ARE YEAR, SECOND 2 DIGITS ARE WORK WEEK, LAST DIGIT IS THE DAY OF THE WEEK

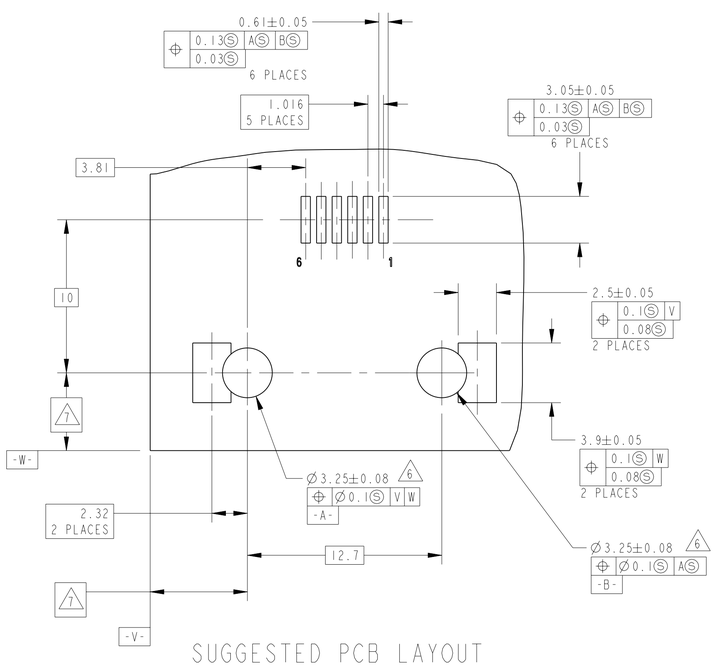


SUGGESTED PCB LAYOUT
(COMPONENT SIDE)

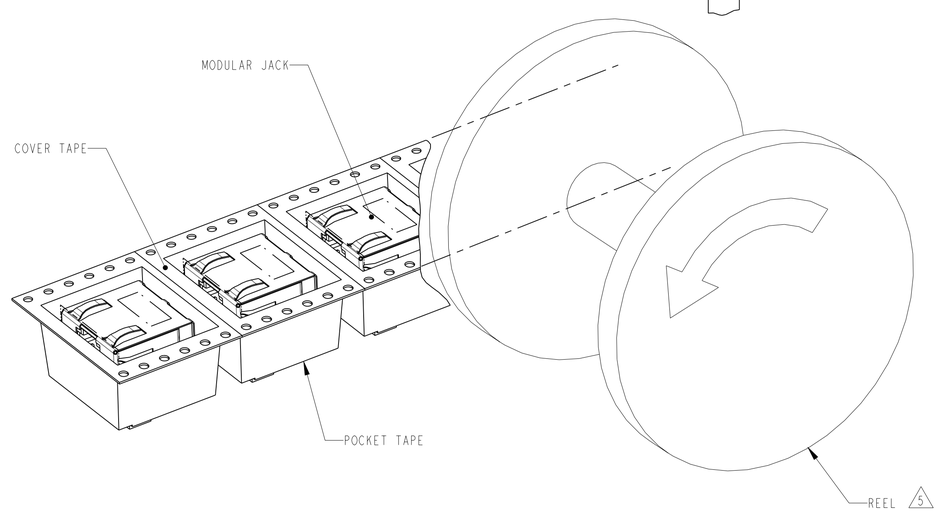


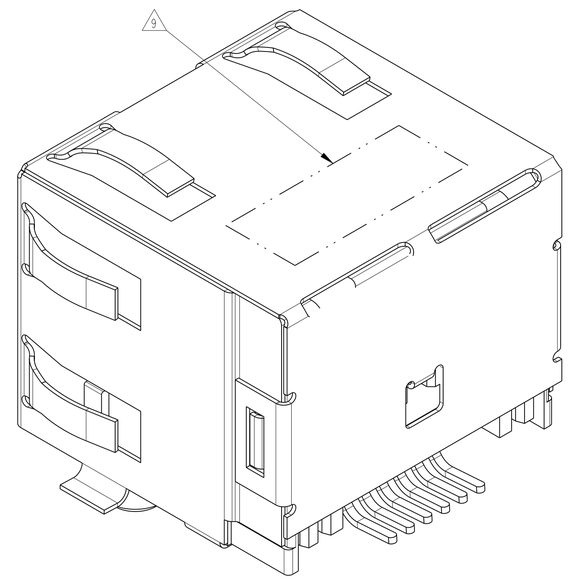


| 6 | 6339212-1 |
|---|---|
| CONTACTS | PART NUMBER |

THIS DRAWING IS A CONTROLLED DOCUMENT.

DIMENSIONS: mm

TOLERANCES UNLESS OTHERWISE SPECIFIED:
0 PLC ±-
1 PLC ±-
2 PLC ±0.25
3 PLC ±-
4 PLC ±-
ANGLES ±-

MATERIAL SEE
FINISH SEE

DWN 21JUN2005 G. ATTADIA - DOCKS
CHK 21JUN2005 J. WESTMAN
APVD 21JUN2005 S. FLICKINGER
PRODUCT SPEC 108-1163-7
APPLICATION SPEC 114-6040/114-2154
WEIGHT -

TE Connectivity

NAME INVERTED MOD JACK ASSEMBLY, 1X1, SHIELDED SURFACE MOUNT, 6 POSITION RJ11, W/O LEDs

SIZE A1 | CAGE CODE 00779 | DRAWING NO C-6339212 | RESTRICTED TO -

CUSTOMER DRAWING | SCALE 8:1 | SHEET 1 OF 1 | REV C

4805 (3/11)

Pro/ENGINEER DRAWING