THIS DRAWING IS UNPUBLISHED. RELEASED FOR PUBLICATION 20
© COPYRIGHT 20 BY TYCO ELECTRONICS CORPORATION. ALL RIGHTS RESERVED.

PART NUMBER	REV	TERMINATOR	FEED TYPE	DESCRIPTION
1426560-1	B	LEADMAKER	MECH POST FEED	CUTS CARRIER
1426560-2	B	BENCH	MECH PRE FEED	CUTS CARRIER
1426560-6	B	LEADMAKER	MECH POST FEED	CONTINUOUS CARRIER
7-1426560-1	B	LEADMAKER	MECH POST FEED	-1 AND SPARE PARTS
7-1426560-2	B	BENCH	MECH PRE FEED	-2 AND SPARE PARTS
7-1426560-6	B	LEADMAKER	MECH POST FEED	-6 AND SPARE PARTS
7-1426560-7	A	-	-	SPARE PARTS KIT

SET UP GAGE 458637-3

LOC	DIST
A	66

REVISIONS

P	LTR	DESCRIPTION	DATE	DWN	APVD
	A	SEE ECO-05-012521	28OCT2005	LJL	MC
	B	SEE ECR-06-024440	17OCT2006	LJL	MC

CRIMP DATA FCT GROUP TERMINAL TYCO CRIMP SPECS 5

TERMINAL NAME: CRIMP CONTACT PIN & SOCKET

CRIMP	SIZE	TYPE	RANGE
WIRE	1.07 [.042 IN]	F	28-24 AWG 4
INSUL	1.57 [.062 IN]	O	1.07-1.30 [.042-.051 IN]

WIRE STRIP LENGTH 2.79-3.56 [.110-.140 IN]

APPL INSTRUCTIONS 408-8322

TERMINAL APPL SPEC - - - -

FEED 6 5.59 [.220 IN]

TERMINALS APPLIED

TYCO P/N	MANUF P/N	-	-
1572816-1	P110-13V	-	-
1949187-1	S110-06V	-	-
-	-	-	-
-	-	-	-

WIRE SIZE	CRIMP HEIGHT	PIN PN & LENGTH [IN]
24 AWG	0.76 ±0.05 [.030 ±.002 IN]	5-354779-8 [.3280]
26 AWG	0.69 ±0.05 [.027 ±.002 IN]	6-354779-4 [.3310]
	-	
	-	
-	-	
-	-	
-	-	
-	-	
-	-	
-	-	
-	-	
-	-	

1. RECOMMENDED SPARE PARTS.
2. GREASE RAM, CAM, CAM FOLLOWER AND FEED ROD LIGHTLY.
3. LUBRICATE DAILY PER THE APPLICATOR INSTRUCTION SHEET SUPPLIED WITH THE APPLICATOR.
4. WIRE RANGE SHOWN IS THAT OF THE TERMINAL.
5. ALL CRIMP DATA CALCULATED BY TYCO ELECTRONICS UK LTD.
6. FEED MAY REQUIRE ADJUSTMENT WHEN CHANGING BETWEEN PIN AND SOCKET.

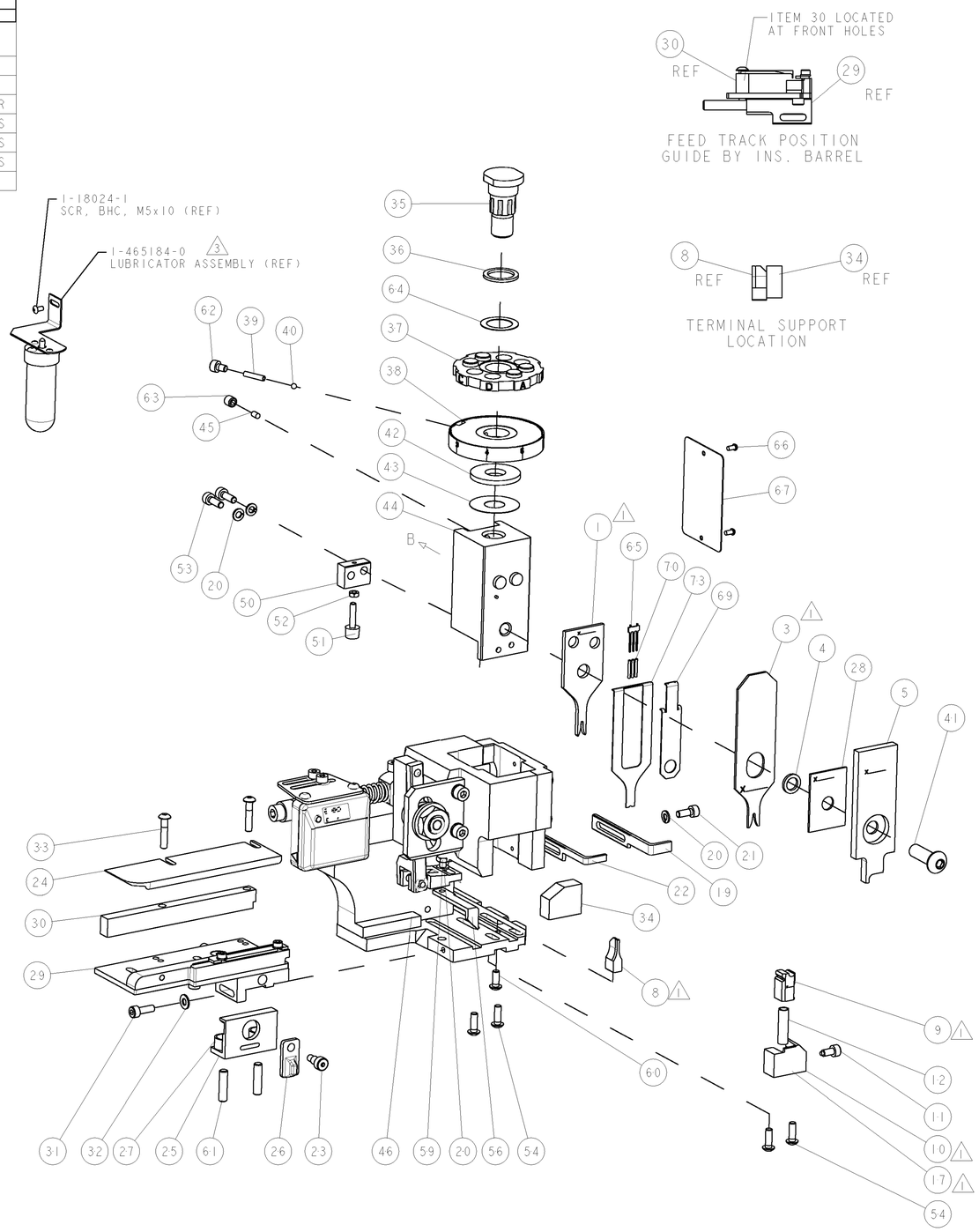

-	1	1	1	1	1	1	1490525-4	DEPRESSOR, WIRE	73
-	-	-	-	-	-	-	-	-	72
-	1	1	1	1	1	1	1338705-1	DOCUMENTATION PACKAGE	71
-	3	3	3	3	3	3	2-23147-2	SPRING, COMPRESSION	70
-	1	1	1	1	1	1	1490524-1	DEPRESSOR, SPACER	69
-	-	-	-	-	-	-	-	-	68
-	1	1	1	1	1	1	461264-1	PLATE, IDENTIFICATION	67
-	2	2	2	2	2	2	21017-2	SCREW, DRIVE	66
-	1	1	1	1	1	1	1424350-1	HOLDER, PIN, WIRED	65
-	1	1	1	1	1	1	986950-1	WASHER, FLAT PRECISION	64
-	1	1	1	1	1	1	3-18031-0	SCR, SET, CUP POINT M6 X 6.0	63
-	1	1	1	1	1	1	18023-9	SCR, SKT HD CAP M4 X 6.0	62
-	2	2	2	2	2	2	2-18032-5	SCR, SET, FLT POINT M5 X 20.0	61
-	1	1	1	1	1	1	18024-7	SCR, BTN SKT HD CAP (M4 X 10.0)	60
-	1	1	1	1	1	1	5-18022-2	SCR, HEX HD CAP M4 X 8.0	59
-	-	-	-	-	-	-	-	-	58
-	-	-	-	-	-	-	-	-	57
-	1	1	1	1	1	1	1338685-1	PAWL, FEED	56
-	-	-	-	-	-	-	-	-	55
-	4	4	4	4	4	4	18024-8	SCR, BTN SKT HD CAP (M4 X 12.0)	54
-	2	2	2	2	2	2	1-18023-2	SCR, SKT HD CAP M4 X 12.0	53
-	1	1	1	1	1	1	18030-1	NUT, HEX, REG M3	52
-	1	1	1	1	1	1	811242-5	BUMPER, HOLD DOWN	51
-	1	1	1	1	1	1	690753-2	SPACER, TONKER	50
-	1	1	1	1	1	1	18024-3	SCR, BTN SKT HD CAP (M3 X 10.0)	49
-	-	1	-	-	1	-	1338675-1	CAM, UNIVERSAL PRE FEED	48
-	1	-	1	1	-	1	1338676-1	CAM, UNIVERSAL POST-FEED	47
-	1	1	1	1	1	1	1320999-3	APPLICATOR SUBASSEMBLY, HDI	46
-	1	1	1	1	1	1	690191-1	PLUG,NYLON	45
-	1	1	1	1	1	1	1338660-1	RAM	44
-	1	1	1	1	1	1	690125-1	SHIM SUB-ASSY	43
-	1	1	1	1	1	1	690124-1	WASHER, RAM (.115)	42
-	1	1	1	1	1	1	2-18024-6	SCR, BTN SKT HD CAP (M8 X 25.0)	41
-	1	1	1	1	1	1	23241-1	BALL, STEEL	40
-	1	1	1	1	1	1	2-22278-7	SPRING, COMPRESSION	39
-	1	1	1	1	1	1	1320922-1	DISC, ADJUST, INSULATION CRIMP	38
-	1	1	1	1	1	1	354777-1	WIRE DISC, ASSEMBLY	37
-	1	1	1	1	1	1	22480-5	SPRING, COMPRESSION	36
-	1	1	1	1	1	1	690212-1	POST, RAM	35
-	1	1	1	1	1	1	1320934-1	SUPPORT, TERMINAL	34
-	2	2	2	2	2	2	1-18024-0	SCR, BTN SKT HD CAP (M4 X 20.0)	33
-	1	1	1	1	1	1	18027-2	WASHER, FLAT, REG M4	32
-	1	1	1	1	1	1	1-18023-2	SCR, SKT HD CAP M4 X 12.0	31
-	1	1	1	1	1	1	1320908-4	SPACER, STRIP GUIDE	30
-	1	1	1	1	1	1	1633073-1	STRIP GUIDE ASSEMBLY	29
-	1	1	1	1	1	1	1-455888-0	SPACER, CRIMPER	28
-	2	2	2	2	2	2	1-22284-0	SPRING, COMPRESSION	27
-	1	1	1	1	1	1	356835-1	LEVER, DRAG RELEASE	26
-	1	1	1	1	1	1	240792-1	DRAG, TERMINAL	25
-	1	1	1	1	1	1	1320928-1	PLATE, STRIP GUIDE	24
-	1	1	1	1	1	1	980371-4	SCR, SKT HD SHLDR 5.0 DIA X 6.0	23
-	1	-	1	1	-	1	690472-2	STRIPPER	22
-	1	1	1	1	1	1	1-18023-1	SCR, SKT HD CAP M4 X 10.0	21
-	4	4	4	4	4	4	18025-2	WASHER, SPRG LOCK, REG M4	20
-	-	1	-	-	1	-	690472-1	STRIPPER	19
-	-	-	-	-	-	-	-	-	18
1 -	1	-	-	1	-	-	1338684-1	SHEAR HOLDER, FRONT	17
-	-	-	-	-	-	-	-	-	16
-	-	-	-	-	-	-	-	-	15
-	-	-	-	-	-	-	-	-	14
-	-	-	-	-	-	-	-	-	13
-	1	1	1	1	1	1	3-22280-3	SPRING, COMPRESSION	12
-	1	1	1	1	1	1	356885-4	STOP, SHEAR	11
1 -	-	1	1	-	1	1	1320921-1	SHEAR HOLDER, FRONT, CUT	10
1 -	1	1	1	1	1	1	462006-1	FLOATING SHEAR, FRONT	9
1 1	2	2	2	1	1	1	1633127-1	ANVIL, COMBINATION .042	8
-	-	-	-	-	-	-	-	-	7
-	-	-	-	-	-	-	-	-	6
-	1	1	1	1	1	1	2-455889-0	DEPRESSOR, SHEAR	5
-	1	1	1	1	1	1	2-238011-5	BLOCK, CRIMPER SPACER	4
1 1	2	2	2	1	1	1	4-1583690-7	CRIMPER, INSUL O	3
-	1	1	1	1	1	1			2
1 1	2	2	2	1	1	1	456401-3	CRIMPER, WIRE PREMIUM	1
-77	-76	-72	-71	-6	-2	-1	PART NO	DESCRIPTION	ITEM NO

VIEW B ROTATED 180°

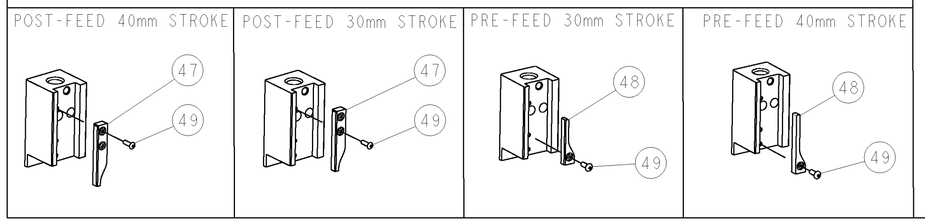

-	-	-	-	-	-	-	-	-	84
-	-	-	-	-	-	-	-	-	83
-	-	-	-	-	-	-	-	-	82
-	-	-	-	-	-	-	-	-	81
-	-	-	-	-	-	-	-	-	80
-	-	-	-	-	-	-	-	-	79
-	-	-	-	-	-	-	-	-	78
-	-	-	-	-	-	-	-	-	77
-	-	-	-	-	-	-	-	-	76
-	-	-	-	-	-	-	-	-	75
-	-	-	-	-	-	-	-	-	74
-77	-76	-72	-71	-6	-2	-1	PART NO	DESCRIPTION	ITEM NO

THIS DRAWING IS A CONTROLLED DOCUMENT FOR TYCO ELECTRONICS CORPORATION. IT IS SUBJECT TO CHANGE AND THE CONTROLLING ENGINEERING ORGANIZATION SHOULD BE CONTACTED FOR THE LATEST REVISION.

DIMENSIONS: mm [IN]

TOLERANCES UNLESS OTHERWISE SPECIFIED: 0 PLC ±- 1 PLC ±- 2 PLC ±- 3 PLC ±- 4 PLC ±- ANGLES ±-

MATERIAL - -

FINISH - -

DWN 27SEP2005 L.LOFTHOUSE
CHK - -
APVD 27SEP2005 F.BACKHURST
PRODUCT SPEC - -
APPLICATION SPEC - See Table
WEIGHT -

tyco Electronics
Tyco Electronics
Harrisburg, PA 17105-3608

NAME SIDE FEED HDI APPLICATOR - -

SIZE	CAGE CODE	DRAWING NO	RESTRICTED TO
A1	00779	C-1426560	-

CUSTOMER DRAWING SCALE 3:5 SHEET 1 OF 1 REV B

AMP 4805 REV 31MAR2000

Pro/ENGINEER DRAWING